Unit Course

MECHANIC LEARNER — RADIO

For Use in Training of Civilian Personnel of the
United States Army Signal Corps

UNITED STATES ARMY SIGNAL CORPS
Civilian Training Branch

and

UNITED STATES OFFICE OF EDUCATION
Vocational Training for War Production Workers

1942

P38.19
1.3.1
#342 y 2

Unit Course

MECHANIC LEARNER—RADIO

For Use in Training of Civilian Personnel of the United States Army Signal Corps

Prepared with the Approval of

THE UNITED STATES ARMY SIGNAL CORPS
Civilian Training Branch

by

PENNSYLVANIA DEPARTMENT OF PUBLIC INSTRUCTION
Division of Industrial Education

in Cooperation with

UNITED STATES OFFICE OF EDUCATION
Vocational Training for War Production Workers

DEPARTMENT OF PUBLIC INSTRUCTION
COMMONWEALTH OF PENNSYLVANIA
HARRISBURG
1942

Digitized by the Internet Archive
in 2016

https://archive.org/details/unitcoursemechan00penn

Foreword

These job sheets have been prepared for use by training centers giving courses in Mechanic Learner—Radio to civilian employees of the Signal Corps. This instruction material will provide directions for work in the shop and will cover one-half of the time spent in this training program.

The purpose of the shop training for Mechanic Learner—Radio is to develop skills in the mechanical and simpler electrical techniques required of the radio repairman. Training experiences and related information are planned for specific application to the requirements of the Signal Corps. It will not be possible to have any considerable amount of correlation between the classroom work and the shop work throughout this course. The classroom work in the principles of electricity will be given as foundational information for the Junior Repairman Trainee—Radio course, as well as related work for Mechanic Learner—Radio course. The trainee who completes this course should have skills which make him of immediate use to the Signal Corps, where only the elementary skills of the radio repairman are needed, or he should be able to continue his training in more advanced courses. The difficulties encountered in obtaining equipment and supplies may make it necessary to deviate from the prescribed details in some of the jobs. Where compromises are necessary, care should be taken that the purpose of the job is accomplished.

These job sheets and reference sheets represent a revision of the original course of study for Mechanic Learner—Radio. The revision was made at a conference under the direction of S. A. Stricklen, Captain, U. S. Army Signal Corps, and J. C. Swanson, Senior Educationist, U. S. Office of Education, and attended by: H. B. Behrendt, San Antonio, Texas; J. C. Bullock, State College, Miss.; W. B. Connoley, Charleston, W. Va.; T. L. Hankins, Lexington, Ky.; M. Homelsky, Philadelphia, Pa.; F. L. Horman, New York, New York; D. F. Keller, Winston-Salem, N. C.; C. D. Kelly, Charleston, W. Va.; F. Kulicke, Chicago, Ill.; A. C. Sorrell, Washington, D. C. The material was written by a group in Philadelphia as indicated in the Acknowledgment. The job sheets and reference sheets have been approved by the Civilian Training Branch of the Signal Corps, Office of the Chief Signal Officer.

A. W. Adams
Major, U. S. Army Signal Corps
Chief
Civilian Training Branch

L. S. Hawkins
Director,
Vocational Training for
War Production Workers
U. S. Office of Education

Acknowledgment

Appreciation is extended to the mechanics, instructors, and draftsmen who assisted in preparing and in criticizing the materials presented in this unit. Lawrence Carver, Max Homelsky, Paul Shallcross, and Byron Blank, all of the School District of Philadelphia, served as technical advisers and analysts. (The suggestions of directors and instructors of Signal Corps Training programs in several states have been reviewed and incorporated in the final draft of this unit of instruction. The assistance of these persons is gratefully acknowledged.)

Special acknowledgment is extended to Charles F. Bauder, Director of Vocational Education, and to William E. Brunton, Assistant Director in charge of War Production Training, of the School District of Philadelphia, for cooperation and assistance in the development of the unit.

This unit was prepared at the Philadelphia Field Curriculum Laboratory of the Pennsylvania Department of Public Instruction. Wayne W. Thompson, Adviser, Division of Industrial Education, supervised the preparation of materials at the laboratory. J. Chester Swanson, Liaison Agent for Signal Corps Training, U. S. Office of Education, coordinated the efforts of the State, the U. S. Office of Education, and the Signal Corps, and also assisted in criticizing technical materials. This work was completed under the direction of Charles F. Zinn, Adviser, Division of Industrial Education, and under the general supervision of Paul L. Cressman, State Director of Vocational Training for War Production Workers, and Urwin Rowntree, Chief, Division of Industrial Education.

FRANCIS B. HAAS
Superintendent of Public Instruction

December, 1942

Table of Contents

PAGE

JOB 1—SOLDERING PRACTICES 1

Reference A—Solders and Fluxes 3

Reference B—Soldering Irons 4

Reference C—Tinning an Electric Soldering Iron 7

Reference D—Preparation of Wire for Soldering 10

Reference E—Crimping Wire 14

Reference F—Soldering with an Electric Soldering Iron 17

JOB SHEET 1—Soldering Wires to Various Terminals and Surfaces 18

A. Soldering Wire to Tin Plate 19

B. Soldering Wire to Lugs 21

C. Soldering Wire to Socket 23

D. Soldering Wire to Terminal Strips in Two Planes 24

E. Soldering Wire to a Male Plug 26

JOB 2—CABLE FORMING 29

Reference G—Cords and Cables 31

JOB SHEET 2—A. Terminating Cords and Cables 33

B. Cabling Practice 37

JOB 3—SCREWS, NUTS, BOLTS AND WASHERS USED IN RADIO WORK 45

Reference H—Screws, Bolts, Nuts and Washers Used in Radio Work 47

JOB SHEET 3—Sorting Hardware 54

JOB 4—DRILLING AND TAPPING 57

Reference I—Sizes of Drills and Taps 59

Reference J—Use of Micrometer 62

Reference K—Drills 64

Reference L—Using the Hand Drill 67

Reference M—The Hand Hack Saw 71

Reference N—Files and Filing 73

Reference O—Cleaning Files 75

Reference P—How to Use the Tap 76

JOB SHEET 4—Make a Drill and Tap Gauge 78

JOB 5—CHASSIS FABRICATION 85

JOB SHEET 5—Chassis Fabrication 87

A. Layout of Chassis 89

B. Providing Holes in Chassis 93

PAGE

JOB 6—THE MULTIMETER 99

Reference Q—The Movement 101

Reference R—The Scale 103

Reference S—Reading the Scale 104

Reference T—Zero Adjustment 107

Reference U—The Voltmeter 108

Reference V—The Ohmmeter 109

Reference W—The Milliammeter 111

Reference X—The Multimeter Combination 112

Reference Y—The A-C Multimeter 113

Reference Z—Summary on Use of the Multimeter 115

JOB SHEET 6—Construct a D-C Multimeter 117

JOB 7—VOLTAGE READING BY USE OF THE MULTIMETER 131

JOB SHEET 7—The Use of the Voltmeter 133

JOB 8—RESISTANCE AND CONTINUITY CHECKING WITH THE OHMMETER 141

JOB SHEET 8—Resistance and Continuity Checking with the Ohmmeter 143

A. Carbon Resistors 148

B. Metal Clad or Shielded Resistors 150

C. Capacitors 151

D. Electrolytic Capacitors 153

E. Switches 154

F. Volume Control 156

G. I-F Transformer 157

H. R-F Transformer 158

I. Power Transformer 159

J. Audio Frequency Transformers 161

K. Variable Capacitors or Tuning Condensers 162

L. Resistors in Series 163

M. Resistors in Parallel 164

JOB 9—TESTING TUBES 173

Reference AA—Tube Testers and their Use 175

JOB SHEET 9—Testing Tubes 178

JOB 10—CAPACITOR TESTERS AND TESTING 181

JOB SHEET 10—Capacitor Testers and Testing 183

JOB 11—THE SLIDE BACK VACUUM TUBE VOLTMETER 195

JOB SHEET 11—The Slide Back Vacuum Tube Voltmeter 197

Reference BB—The Relationship of the Schematic Diagram, Mechanical Layout and Wiring Diagram of Radio Equipment 203

PAGE

JOB 12—REMOVAL AND REINSTALLATION OF INDIVIDUAL COMPONENTS FROM RADIO CHASSIS 211
Reference CC—Making Sketches of Parts and Wiring 213
Reference DD—Removing Wires from Terminals 214
Reference EE—Drilling Out Rivets 215
Reference FF—Removing Parts Mounted by Metal "Tangs" or Ears 216
Reference GG—Conditions for Discarding Parts 217
Reference HH—Wire Splicing 223
Reference JJ—Reinstallation of Parts 224
JOB SHEET 12—Removal and Reinstallation of Parts 225

JOB 13—COIL WINDING AND REPAIR 229
JOB SHEET 13—Coil Winding and Repair 231

JOB 14—A SIMPLE POWER SUPPLY 241
JOB SHEET 14—A Simple Power Supply 243

JOB 15—AN AUDIO OSCILLATOR 251
JOB SHEET 15—An Audio Oscillator 253

JOB 16—A HARTLEY OSCILLATOR 259
JOB SHEET 16—A Hartley Oscillator 261

JOB 17—A SINGLE STAGE AUDIO AMPLIFIER 269
JOB SHEET 17—A Single Stage Audio Amplifier 271

JOB 18—A RESISTANCE COUPLED AMPLIFIER 279
JOB SHEET 18—A Resistance Coupled Amplifier 281

JOB 19—A FREQUENCY METER 289
JOB SHEET 19—A Frequency Meter 291
Reference KK—Graphs 297

JOB 20—A ONE TUBE REGENERATIVE RECEIVER 301
JOB SHEET 20—A One Tube Regenerative Receiver 303

JOB 21—A THREE TUBE RECEIVER 311
JOB SHEET 21—A Three Tube Receiver 313

The following jobs are optional and intended only for supplementary work if time permits. They are not necessarily required for completion of the course.

JOB 22 (Optional)—A RADIO FREQUENCY AMPLIFIER 319
JOB SHEET 22—A Radio Frequency Amplifier 321

JOB 23 (Optional)—DISASSEMBLE AND REASSEMBLE A COMMERCIAL RADIO RECEIVER 331
JOB SHEET 23—Disassemble and Reassemble a Commercial Radio Receiver 333

APPENDIX, GLOSSARY AND ABBREVIATIONS 337
APPENDIX I—RMA Resistor Color Code 339
APPENDIX II—Mica Capacitor Color Code 340
APPENDIX III—RMA Transformer Color Code 341
APPENDIX IV—Machine Screw Clearance Sizes 342
APPENDIX V—Drill Sizes 343
APPENDIX VI—Copper Wire Table 344
GLOSSARY OF RADIO PARTS AND SYMBOLS 345
GLOSSARY OF RADIO HARDWARE AND MISCELLANEOUS FITTINGS 361
ABBREVIATIONS 368

JOB 1

SOLDERING PRACTICES

The contacting surfaces of a terminal and wire which are exposed to air are oxidized or soiled by air and this will prevent efficient electrical conduction. To prevent this oxidation connections are soldered, thereby assuring a continuously efficient contact. Before soldering is done, the connection must be made mechanically and electrically secure.

This unit provides information on preparation of materials, attaching wires, and various job applications.

SOLDERS AND FLUXES

Solders:

Solder is a fusible alloy used for joining metals, applied in a molten state. The chief property of tin lead solders is that they adhere readily to all common metals.

The best solder for radio work contains 63% tin and 37% lead; it melts at 358°F.

High tin content in solder makes it hard and brittle, while solder with a high lead content will be soft.

Fluxes:

Solder will not form a perfect bond with any metal when a layer of oxidation is present. Flux, when heated, removes oxides, prevents oxidation during the soldering process, and enables the solder to adhere to the metal surface.

Rosin flux is the only one permitted on radio equipment. There are, however, other types of fluxes, such as acid. These acids are not used because of their corrosive action.

No residue of the rosin should be left in the soldered joint because rosin forms an insulating coating. Rosin, having a lower melting point than solder, flows into the joint first, thoroughly cleaning it. The melted solder immediately follows, filling and sealing every crevice of the joint. The rosin will "float" to the surface of the solder if the solder is sufficiently fluid.

Rosin Core Solder:

The practice in radio soldering is to use a core solder which is wire solder with rosin in the center. Because the rosin has a lower melting point than the solder, the rosin flows out first to clean the surface when heat is applied.

SOLDERING IRONS

General Information:

In providing the heat necessary for the soldering process several methods are used. The most commonly used is the electrically heated soldering iron. Very often the flame heated type is employed where electricity may not be available; and utilizes either coke, gas, gasoline, or alcohol in a furnace or torch to heat the body of the soldering iron.

Direct application of the flame of the gasoline or alcohol torch to the wire being soldered may be made, as in antenna construction where no insulated or easily damaged parts are close by. Naturally this method is not permissable in the chassis of a set.

Electrically heated irons are preferred wherever power is available.

ELECTRIC IRONS

These are rated in watts at a certain voltage. An iron rated at 100 watts would be satisfactory for most requirements. Heavier joints and wires require larger irons which consume more power. Care must be exercised so that an iron rated to operate on 115 volts is not plugged into a 230 volt outlet. This will burn out the iron.

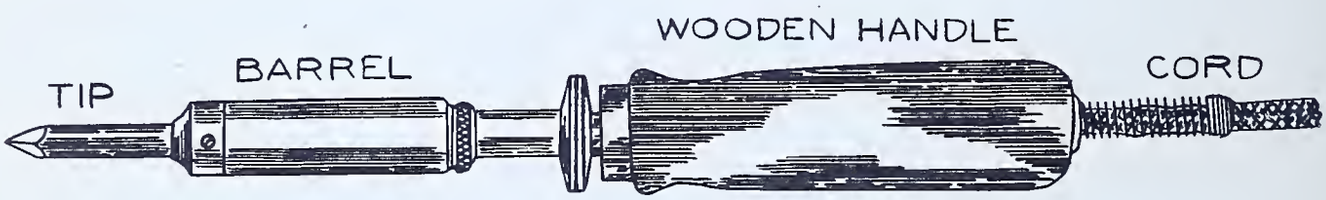

FIG.-1

TYPICAL ELECTRIC SOLDERING IRON FOR RADIO WORK

The element of the iron is located inside the metal barrel. When the iron is plugged in, the element gets hot and in turn heats the barrel and copper tip.

Continued heating of the iron causes the tip to oxidize. For this reason the tip when cold should be removed occasionally from the barrel, cleaned and replaced. The tip is secured in the barrel by means of threads or by a set screw. If the tip should stick, light tapping may free it. Failure to clean the tip occasionally may result in its "freezing" in the barrel. This condition makes replacement difficult. When a tip is replaced in an iron, it should be installed firmly in the barrel and should remain secure at all times.

FLAME HEATED IRONS

Flame heated soldering irons are rated according to the weight of the head. A one pound head is usually suitable for radio work. A typical iron is shown in the illustration "Gasoline Torch and Soldering Iron."

Care should be exercised so that the iron is not overheated; this results in excessive oxidation and may char the handle, causing it to loosen.

The iron is commonly heated in a gas furnace when available. In the field a gasoline torch is generally used for heating purposes.

The torch should be operated in accordance with the instructions accompanying it, which in essence are as follows:

1. Fill tank nearly full with clean low test gasoline, out of a clean receptacle. See illustration "Gasoline Torch and Soldering Iron."

   Caution: Do not use "high test" or "treated" fuel; its low point of vaporization may cause explosion.

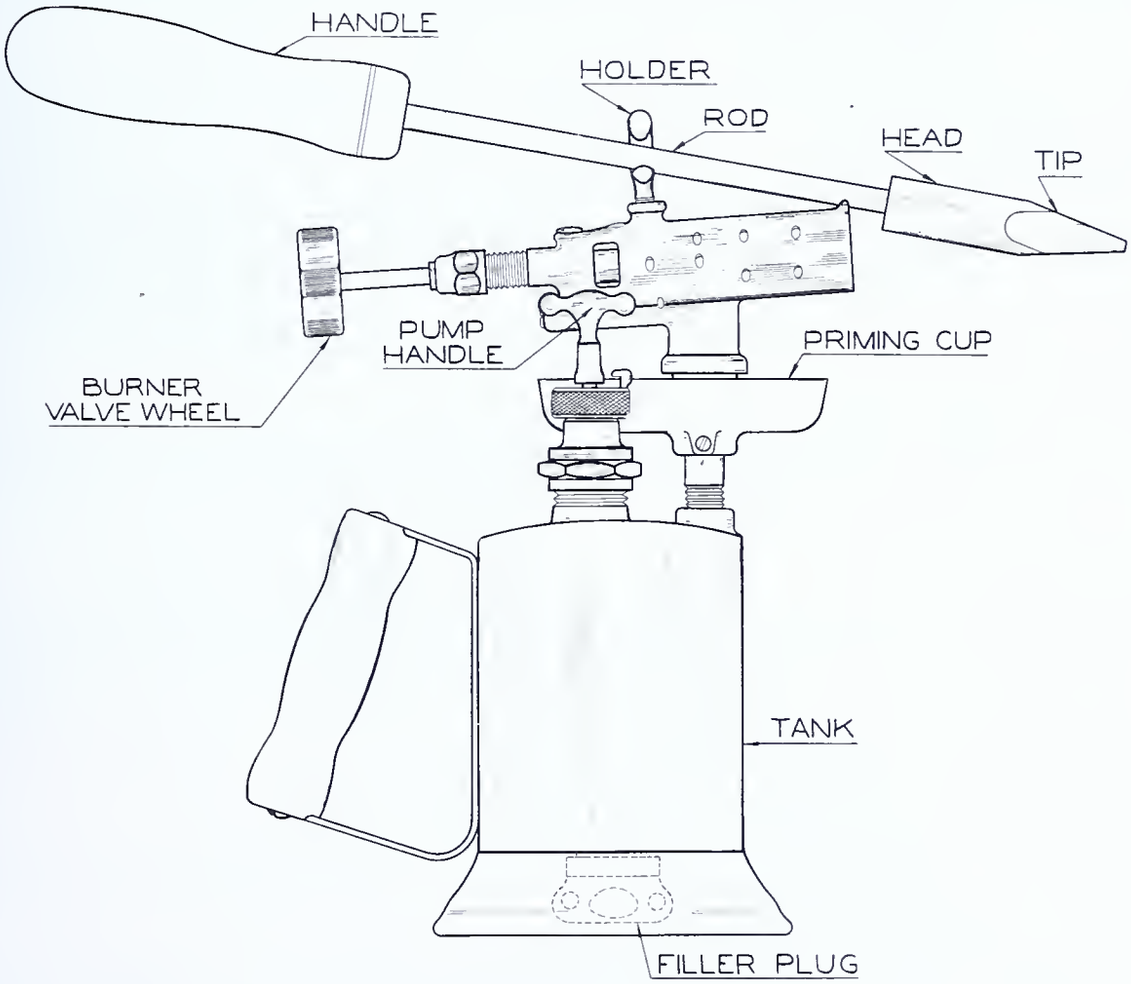

GASOLINE TORCH AND SOLDERING IRON

2. Screw in filler plug without using excessive force or pressure. By using ordinary laundry soap on threads, a better seal can be secured between lead washer on plug and tank seat.

3. Pump not more than five strokes of air into tank; this is enough to start.

   Note: Some torch pumps have a lock that must be released by turning handle before pumping. The burner valve should be closed before pumpi

4. Turn burner valve wheel counter-clockwise slightly and allow gasoline to flow slowly into priming cup. When nearly full shut off burner valve. See illustration "Gasoline Torch and Soldering Iron."

   Caution: Do not let gasoline overflow priming cup; if it does, be sure to wipe tank dry before lighting fuel in priming cup.

5. Light fuel in priming cup and burn all of the fuel. Generator veins of burner must be thoroughly heated.

6. When gasoline in priming cup is nearly burned out, open burner valve slightly (by turning to left) and if necessary light burner flame.

   Caution: Hold lighted match close to side air vent holes in burner nozzle and not in front of burner. An intense blue flame should result.

7. To increase flame in volume, pump more pressure in tank and regulate the burner valve.

   Caution: Do not pump beyond the amount necessary to maintain a hot steady flame. Too much pressure may result in damage to the unit.

8. To shut off torch, turn burner valve wheel clockwise until flame is extinguished.

   Note: After flame is extinguished turn the burner valve wheel counter-clockwise slightly to prevent valve from freezing in the valve seat.

HEAT THE IRON AS FOLLOWS:

1. Place soldering iron on holder of torch so that the flame strikes head of soldering iron. See illustration "Gasoline Torch and Soldering Iron."

   Note: Tip should not be held in flame.

2. Heat iron until the tip will readily melt solder.

   Note: From time to time remove the iron from the flame and test by holding solder against tip.

   Caution: Do not permit iron to become red hot as this burns the tin from the tip and oxidizes the copper excessively.

FILING AND TINNING AN ELECTRIC SOLDERING IRON

General Information:

In order to do a good soldering job, it is necessary to have the tip properly shaped and tinned. Both factors are important when a satisfactory solder joint is desired.

Tinning an iron is a process whereby a thin, uniform layer of solder is formed upon the tip of an iron. The purpose of tinning a soldering iron is to insure a satisfactory flow of heat from the iron to the work, and this heat transfer occurs easily from a bright tinned surface.

When the tip of the iron becomes "pitted" by the action of the rosin core in the solder, the iron must be filed and re-tinned. The iron can be kept clean by wiping with a rag whenever corrosion accumulates.

Tools needed:

Soldering iron
Screwdriver
Gas pliers
File, 10" mill

Equipment needed:

Bench vise

Materials needed:

Rosin core solder
Sandpaper or emery cloth

Procedure:

Filing

1. Choose iron having tip shaped as desired.

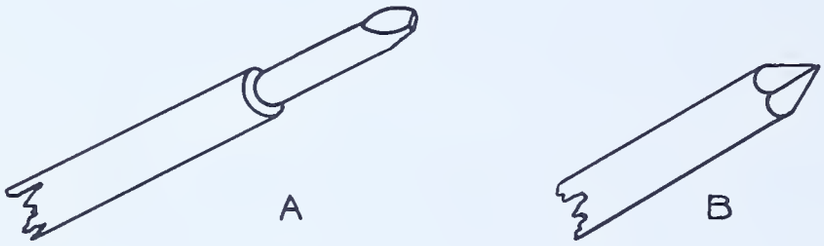

FIG. 2

Note: The shape of the tip A in Fig. 2 above is used more frequently. This shape provides larger surface contact and better heating because of the size of the tip. Tip B is used in smaller work.

2. Remove tip from iron.

Note: Some tips screw into the iron; others are held in place by a set screw.

3. Place the tip between jaws of vise at an angle as indicated in Fig. 3. Close the vise so the tip will be held firmly. To prevent the tip from becoming flat or out of shape, do not close vise too tightly.

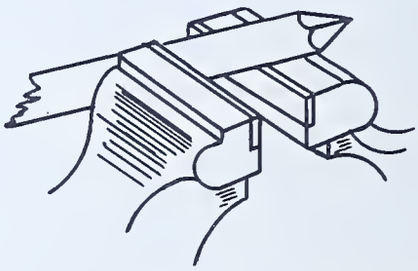

FIG. 3

Alternate Method:

Hold the iron and rest between partly opened jaws of the vise as indicated in Fig. 4. If this method is used, care must be taken to avoid the possibility of jarring or injuring the heating elements in the iron while filing.

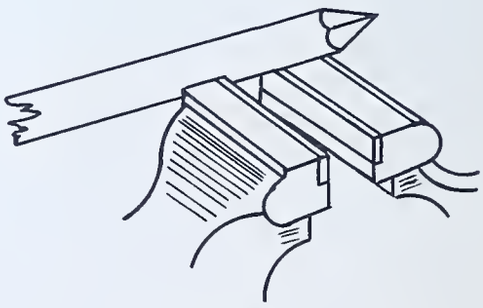

FIG. 4

4. File the tip to remove large pits, using a fine metal-cutting file. Be careful to retain original shape of tip.

5. Replace tip in soldering iron.

6. Plug soldering iron into receptacle and allow to heat from 5 to 10 minutes.

7. Rub tip on sandpaper or very lightly with a mill file.

   Note: Sandpaper is preferred to reduce wear on the tip in tinning of the iron.

Tinning:

8. Apply solder on tip immediately after cleaning with file or sandpaper.

9. Permit the solder to remain on the tip for a few seconds; then wipe off with a piece of cloth.

10. If the solder is not evenly distributed, re-tin the surface by lightly filing and immediately applying solder to the tip by rubbing the molten solder until it adheres evenly over the surface tinned, as shown in Fig. 5 below.

FIG. 5

Close-up photograph showing a tinned soldering iron tip. Note that only the flat surfaces of the copper tip are tinned.

PREPARATION OF WIRE FOR SOLDERING

General Information:

Insulation must be removed from the end of wire to be soldered. Methods for removing insulation vary according to the types of wire and insulation used. In all cases wires should not be touched with dirty hands while removing insulation, nor should the prepared wire be allowed to come in contact with grease, wax, or any other kind of foreign matter during the process of soldering.

PUSH-BACK BRAIDED COTTON COVERED WIRE

This is most convenient to use because the insulation can be pushed back to expose as much wire as needed to make the splice. The upper view of Fig. 6 shows the correct method of pushing back the insulation of solid push-back insulated wire with the fingers preparatory to soldering. The same method is used for stranded wire of this type. When the insulation cannot readily be pushed back far enough with the fingers, it will be easier to grasp the bare end of the wire with long-nose pliers, as illustrated in the lower view of Fig. 6. When holding the wire with pliers in this manner, it is a simple matter to push the insulation back with the fingers as much as desired.

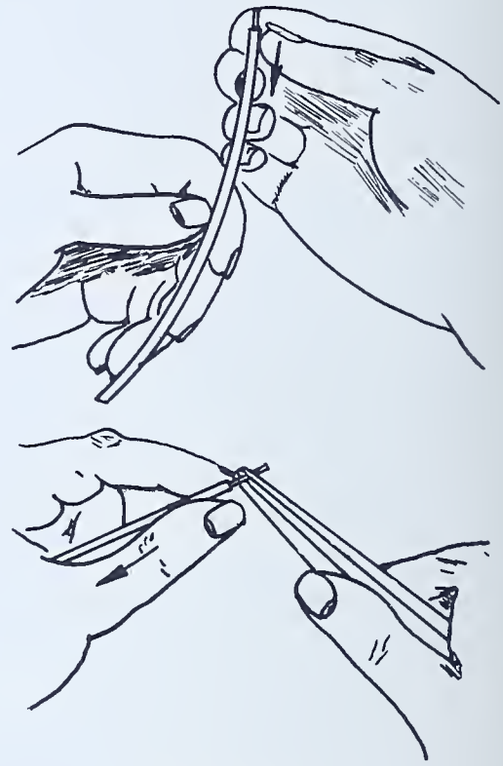

FIG. - 6

RUBBER COVERED HOOK-UP WIRE

The insulation is removed with diagonal cutters by pinching in the cutters at the required point and pulling the cutters toward end of wire. See Fig. 7.

Caution: Care should be taken so that the wire is not nicked or cut in the process.

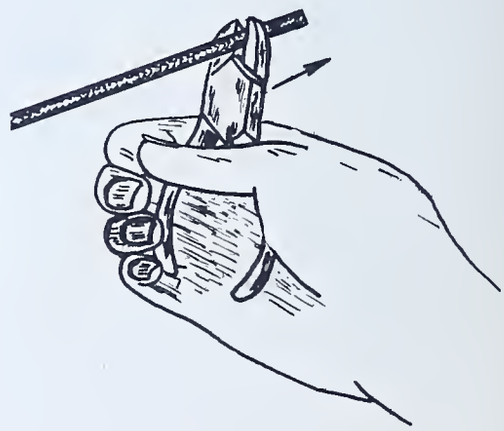

FIG. - 7

RUBBER COTTON COVERED HOOK-UP WIRE

Has a layer of rubber next to the wire and a braided cotton external covering. The insulation to be removed is first crushed by using pliers (see Fig. 8) and then removed by diagonal cutters as in the removal of the insulation from a rubber covered hook-up wire. The upper view of Fig. 8 shows a method of using long-nose pliers to squeeze off the insulation from ordinary (not push-back) hook-up wire preparatory to soldering. Try placing the wire at different positions along the jaws of the pliers, for there is always one position at which the greatest pressure can be exerted on the wire. Usually this position will be close to the pivot. Some long-nose and side-cutting pliers are designed so that insulation can be squeezed between the handles, as illustrated with side-cutting pliers in the lower view of Fig. 8.

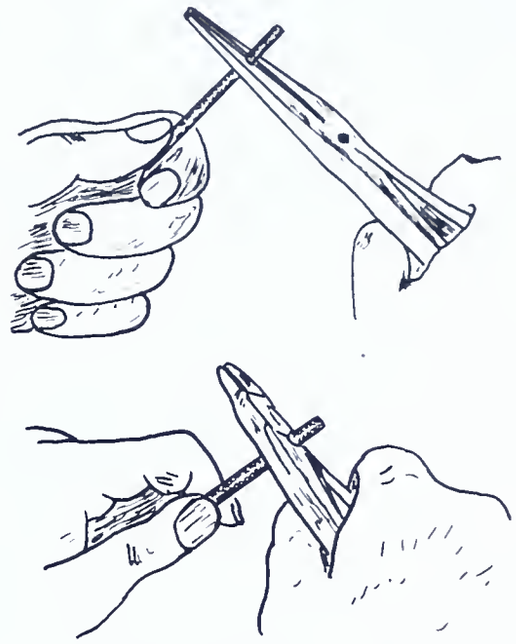

FIG. - 8

ENAMEL COVERED WIRE

Enamel must be removed completely from the portion of wire to be soldered. Fig. 9 shows method of using fine sandpaper (about #00) to remove enamel from stranded wire. Press the folded sandpaper (about one inch wide and two inches long) together with the wire in between; then draw out the wire. Repeat until the enamel is removed entirely from the portion of wire to be soldered. A knife may also be used if sandpaper is not available.

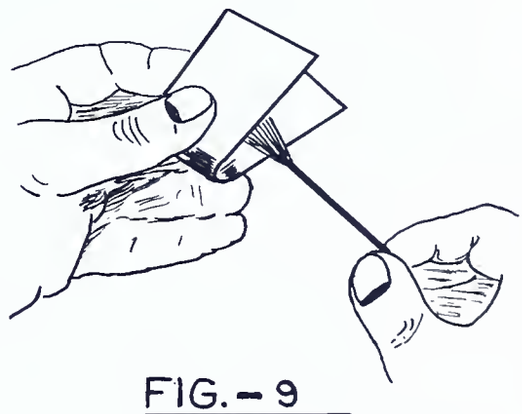

FIG. - 9

Caution: Do not nick or cut wire if knife is used - the back of the knife blade is preferred to the cutting edge for scraping.

LITZ WIRE

Composed of several strands of fine enameled wire twisted into one wire and used in many of the coils in radio receivers. Seven strands of #41 enameled wire are twisted to form one wire. Before soldering this wire, the enamel must be completely removed from the ends of each strand by using #00 sandpaper. Care must be taken so that no strands are broken. The strands are twisted and tinned after enamel is removed.

Before any stranded wire is crimped to a terminal and soldered, the strands should be twisted and tinned so that the individual strands will not spread when the wire is crimped.

If stranded wire is not perfectly clean when insulation is removed, steps A to G (see Fig. 10) should be followed to properly prepare wire for soldering.

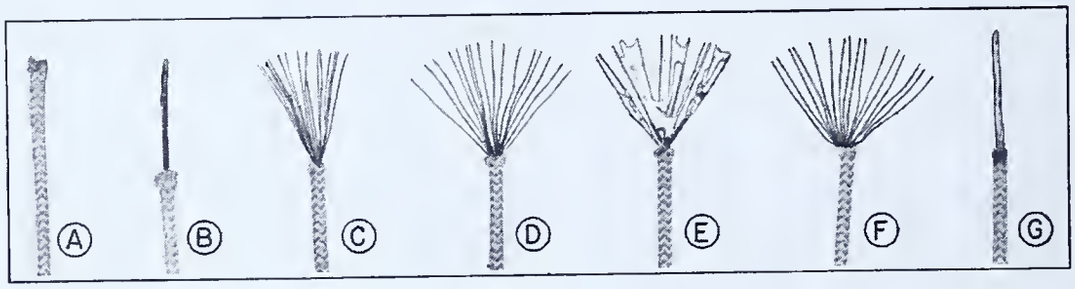

FIG. 10

Steps in preparing one end of the No. 18 stranded untinned lamp cord which has rubber insulation covered with cotton braid. A - Original wire; B - Wire with insulation removed from end; C - Strands spread out for cleaning; D - Cleaned strands ready to be tinned; E - Completely tinned strands; F - Tinned strands after surplus solder has been removed; G - Tinned strands twisted together again.

TINSEL WIRE

Extensively used for phone cords or wherever an exceptionally flexible cord is required. Before soldering tinsel wire, the tinsel must be served with about #34 bare copper wire, and the insulation should be served with thread to prevent fraying (see following procedure).

Caution: Avoid using too hot an iron, as excessive heat will burn the silk support (core) of the wire. An iron just hot enough to melt the solder does the best job.

Procedure:

1. Remove insulation by cutting with diagonal cutters, exposing $\frac{1}{2}$" of tinsel wire as in Fig. 11.

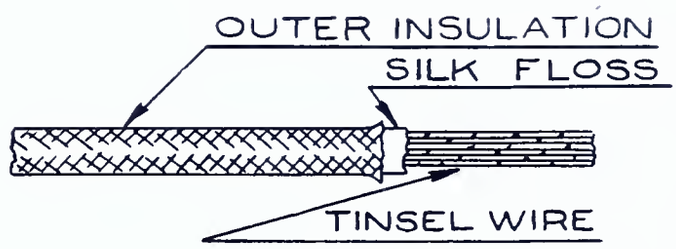

FIG. 11

2. Push insulation back, exposing another $\frac{1}{2}$" of tinsel wire as in Fig. 12.

3. Wrap exposed tinsel wire with #34 bare copper wire as in Fig. 12.
Note: This process is called "serving".

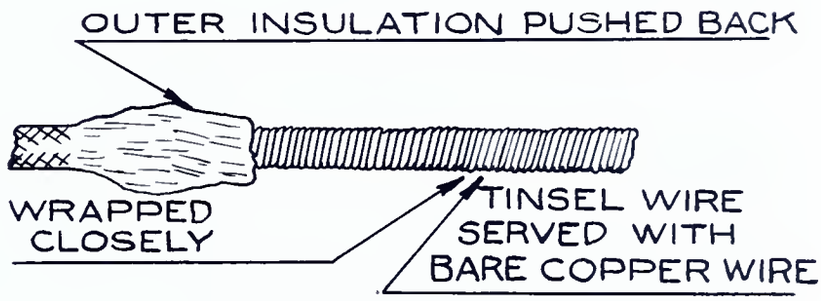

FIG. 12

4. Push insulation back to original position over served portion of wire as in Fig. 13.

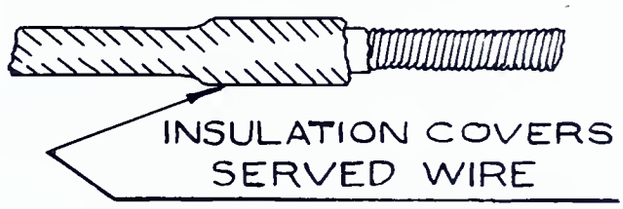

FIG. 13

5. Serve insulation with light linen cord as in Fig. 14.
Note: See Fabrication of Cords and Cables in Job 2A, Page 33.

FIG. 14

6. Tin the exposed portion of tinsel wire served with copper wire.

CRIMPING WIRE

General Information:

The purpose of crimping wires to a terminal of any type is to insure a uniform, easily made, strong mechanical connection. There are several types of crimped joints commonly used.

Hole Type Terminal Hook

1. Push back insulation about $\frac{1}{2}$".
2. Bend hook in wire with long-nose pliers as in Fig. 15.
3. Insert hook in hole of terminal as in Fig. 16.
4. Crimp wire flat against terminal with pliers as in Fig. 17.

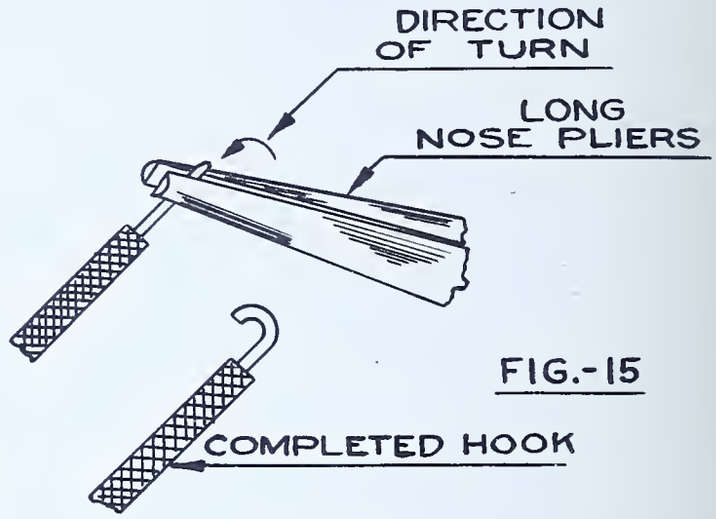

FIG.-15

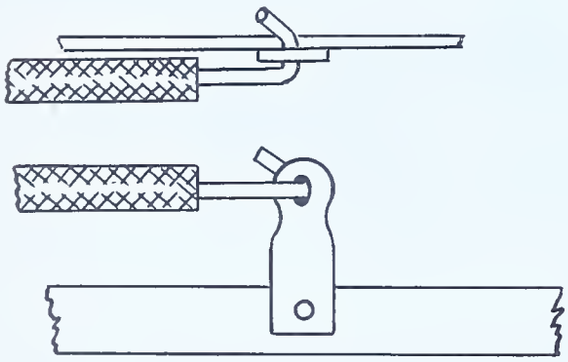

FIG.-16

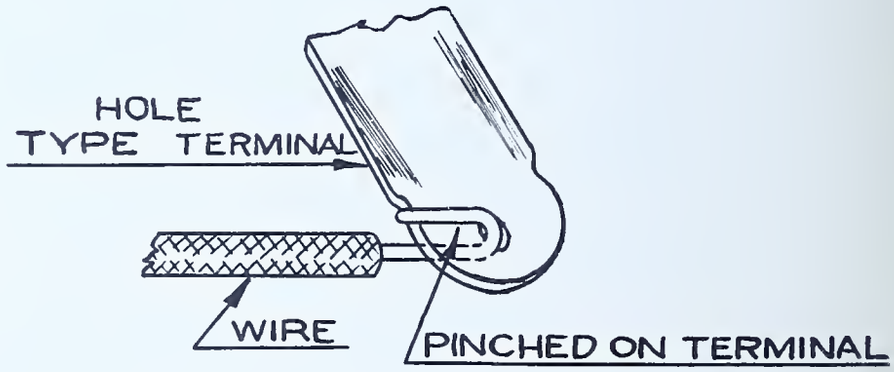

FIG.-17

Hole Type Terminal Butt Joint

1. Insert bare wire end into hole in terminal as in Fig. 18.
2. Solder while in that position as in Fig. 19.

Note: Solder must fill hole and run smoothly over terminal.

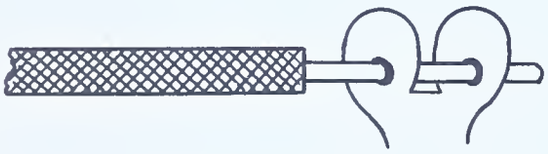

FIG.-18

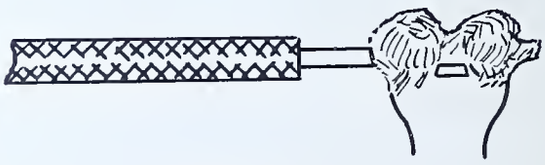

FIG.-19

Blank Type Terminal Hook Joint

1. Bend hook in wire with pliers. Hook should be as long as the width of the terminal. See Fig. 20.

2. Place hook around terminal as in Fig. 20.

3. Crimp wire flat against terminal with pliers as in Fig. 21.

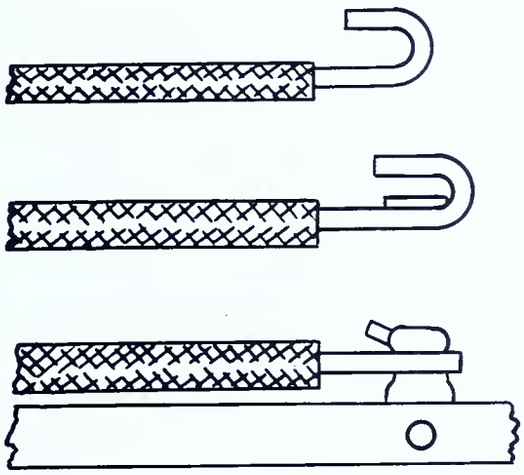

FIG.-20

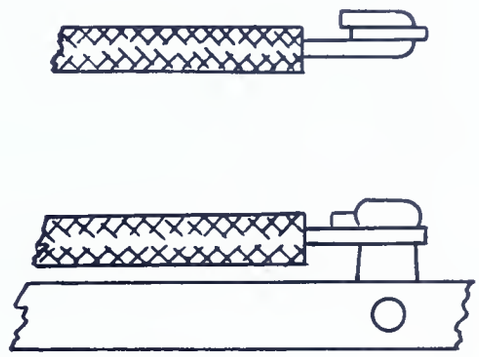

FIG.- 21

Blank Type Terminal Wrap Around Joint

1. Bend wire with pliers - hook should be about twice as long as the terminal is wide. See Fig. 22.

2. Place hook around terminal as in Fig. 23.

3. Crimp wire flat against terminal with pliers.

4. Form remaining wire around terminal with pliers as in Fig. 24.

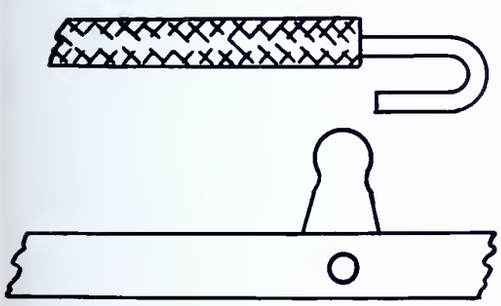

FIG.- 22

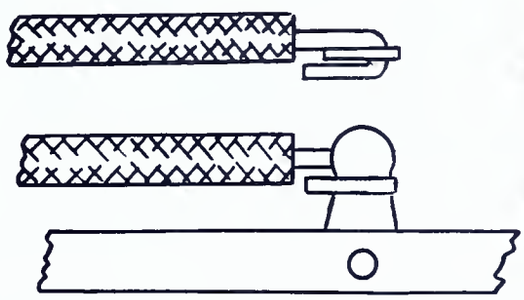

FIG.- 23

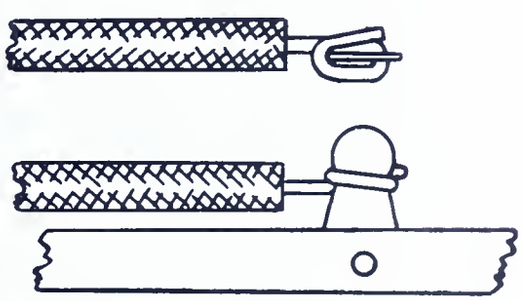

FIG.- 24

Note: In the previous procedures care must be taken to keep the insulation spaced reasonably close to the terminal, yet not so close that the soldering process will burn it.

SPADE LUGS AND GRIP CAPS

1. Remove 1/4" of insulation from end of wire.

2. Place end of wire on spade lug or grid cap as shown in Fig. 25.

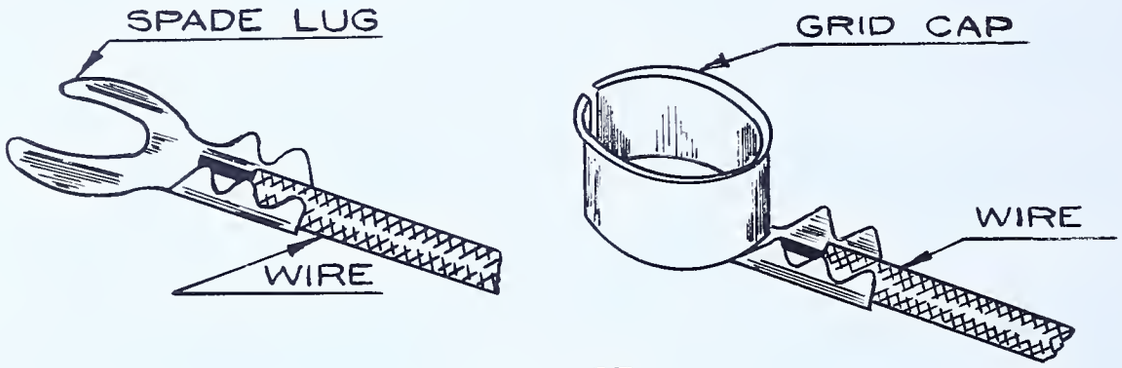

FIG.-25

Note:
If lug or cap has perforation, wire should extend through hole.

3. Crimp flanges of lug around wire with long-nose pliers as shown in Fig. 26.

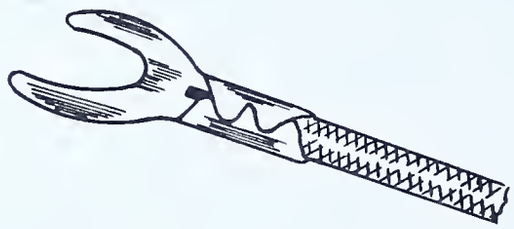

FIG.- 26

SOLDERING WITH AN ELECTRIC SOLDERING IRON

General Information:

The soldering iron must heat the joint to be soldered to a temperature that will readily melt solder. The solder will then run into each crack in the joint and form a good soldered joint. If the iron is not hot enough, or too small in size to heat a particular joint, the solder will not flow into the joint properly and the result is a "cold soldered" joint. This is to be avoided, as a poorly soldered joint results. Make sure the iron is large enough and hot enough to do a good job.

Procedure:

1. Heat the iron. The iron is sufficiently heated when it will melt solder quickly on contact.

2. Tin tip if necessary.

3. Place the tip of the soldering iron on the joint so as to get the greatest area of contact possible.

4. Aply a small speck of solder on tip of iron.

5. Apply just enough additional solder to the joint for the solder to flow into and fill the crevices. The metal of the joint must be hot enough to cause the solder to melt and spread. Remove the iron by lifting it up and away from the joint, and do not move wire until solder has set.

   Note: Hot smoothly flowing solder has a bright silver luster; as it cools, its appearance changes to a duller gray, setting shortly after this change. If the joint cools with a rough surface, the soldering job has not been properly done; a dirty contact, improper heating, or moving the wire may be the cause.

SOLDERING WIRES TO VARIOUS TERMINALS AND SURFACES

General Information:

It is seldom possible to make the most minor repair in radio work without having to do a soldering job. For this reason the ability to solder properly is one of the most essential requirements of a radio mechanic.

All joints should be made mechanically and electrically secure before soldering if possible. They should not be touched with dirty hands or allowed to come in contact with grease or wax while soldering. Care should be taken to avoid wasting solder.

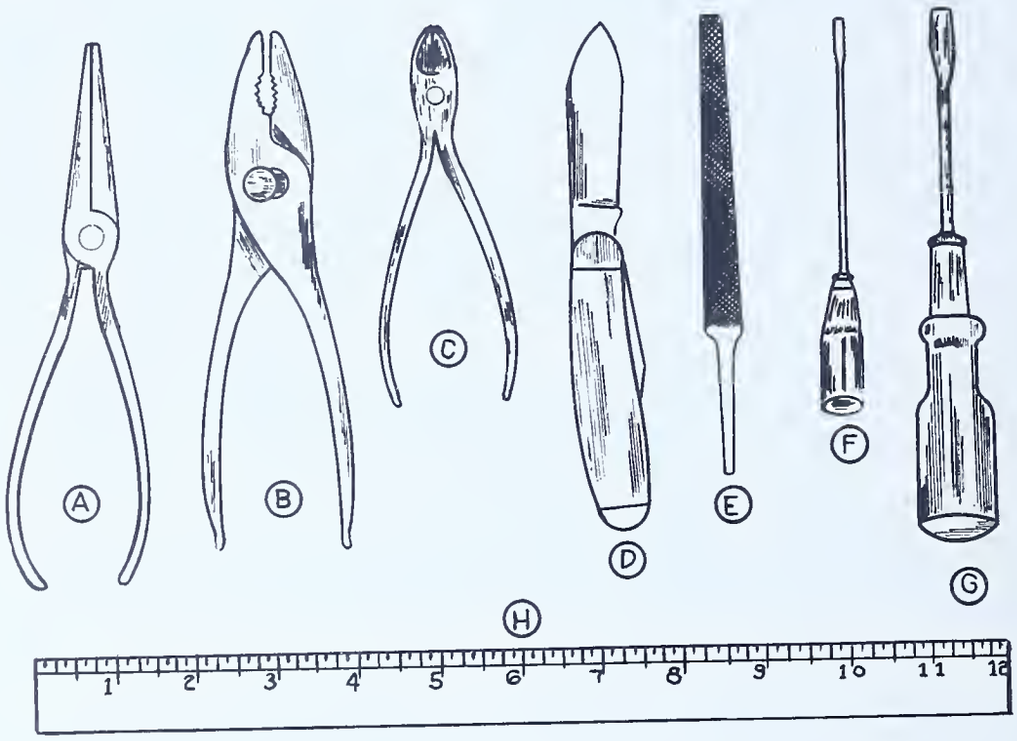

Tools needed:

1. Long-nose pliers (A)
2. Combination slip joint pliers ("Gas pliers") (B)
3. Diagonal cutters (C)
4. Pocket knife (D)
5. Medium-size flat metal-cutting file (E)
6. Small screwdriver (F)
7. Medium-size screwdriver (G)
8. 12-inch ruler of any type (H)
9. Soldering iron
10. Hammer

Materials needed:

1. Rosin core solder
2. Ten feet of #20 push-back wire.
3. Two terminal strips with 4 to 6 terminals on each strip.
4. One tube socket - prong must have at least 2 holes for wiring.
5. One male plug connector.
6. Two old tube bases.
7. One piece of tin plate approximately $2\frac{1}{2}$" x 5".
8. Two pieces of wood approximately 3/8" x 4" x 6".
9. Round head wood screws #4 - 3/8".
10. Brads #16 - 1".
11. Wiping cloth.

A. SOLDERING WIRE TO TIN PLATE

Specifications:

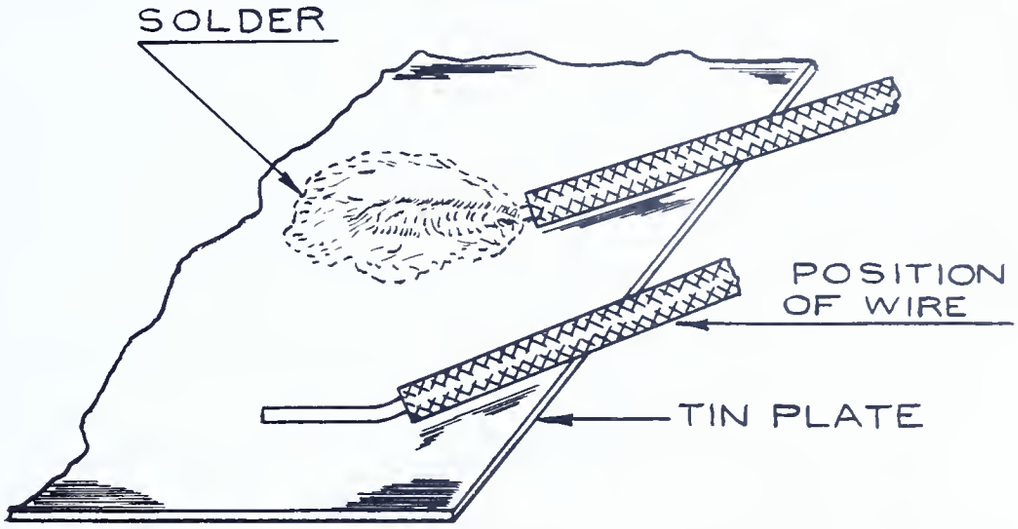

FIG.- 28

1. Ten push-back wires to be soldered to tin plate.

2. Metal: about 22 gauge approximately $2\frac{1}{2}$" x 5" tin plate or galvanized sheet iron.

3. Wire: ten pieces of any type of solid wire available, about 4" long.

4. Approximately $\frac{1}{2}$" of end of wire to be soldered flat on plate and the remainder of wire to be bent away from surface of plate. Bend is made before soldering. See Fig. 28.

   Caution: Do not bend wire at too sharp an angle or it will break.

Procedure:

1. Plug iron into receptacle and allow to heat.

2. Cut 10 pieces of wire about 4" in length.

3. Take one piece of wire and push back the insulation about $\frac{1}{2}$".

4. Tin soldering iron, if necessary.

5. Hold tip of iron on one spot of tin plate for several seconds and allow tin to heat.

6. Melt a small spot of solder on tin plate at the point heated.

7. Hold wire in jaws of long-nose pliers and heat with iron.

8. Melt a small amount of solder on wire.

9. Hold wire end on soldered spot on tin plate and heat with iron until solder runs smoothly; then remove iron.

10. Allow solder to cool for several seconds before releasing wire.

11. Have instructor inspect connection.

    Note: If satisfactory, repeat with the remaining 9 pieces of wire. If unsatisfactory, make one more sample for inspection.

12. Have completed exercises inspected.

    Note: Strive to make the 10 connections properly and uniform in appearance before submitting for inspection.

13. Unsolder wires from tin plate and save pieces for later use.

14. Heat solder spots on plate and remove with brush or cloth.

B. SOLDERING WIRE TO LUGS

Specifications:

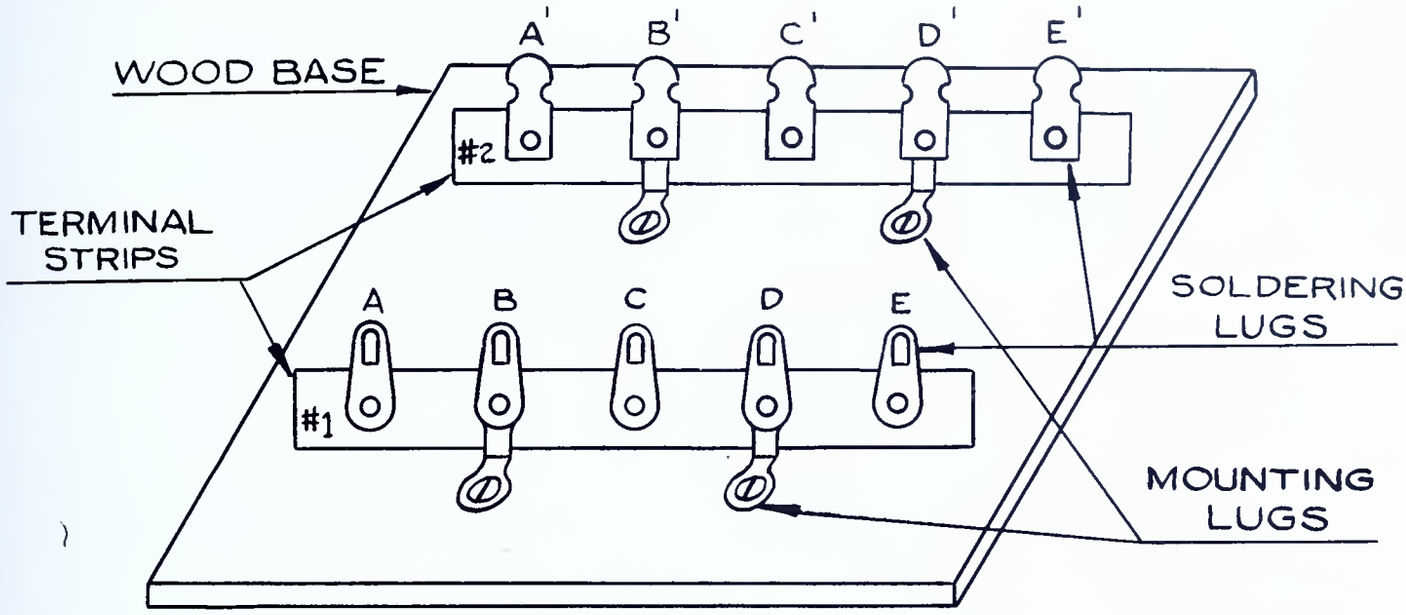

FIG.– 29

1. Two terminal strips to be mounted parallel on wood base with screws. See Fig. 29.

2. Wood: one piece approximately 3/8" x 4" x 6".

3. Terminal strips: two terminal strips having 5 terminal lugs and 2 mounting lugs.

4. Wire: five pieces of any type of solid wire available, about 4" long.

5. Screws: four #4 -3/8" round head wood screws.

6. Five wires to be soldered between corresponding terminals on strips #1 and #2. See Reference Sheet E, Page 14.

Procedure:

1. Mount terminal strips on piece of wood with wood screws as shown in Fig. 29.

2. Crimp one end of a piece of push-back wire to lug A on strip #1. See Reference Sheet E.

3. Tin soldering iron, if necessary.

4. Hold tip of iron to lug and heat for several seconds.

5. Melt a drop of solder on lug and allow to run smoothly over crimped wire and lug so that the hole in lug is filled with solder. This is possible only if hole is small; large holes are not filled with solder. See Fig. 30.

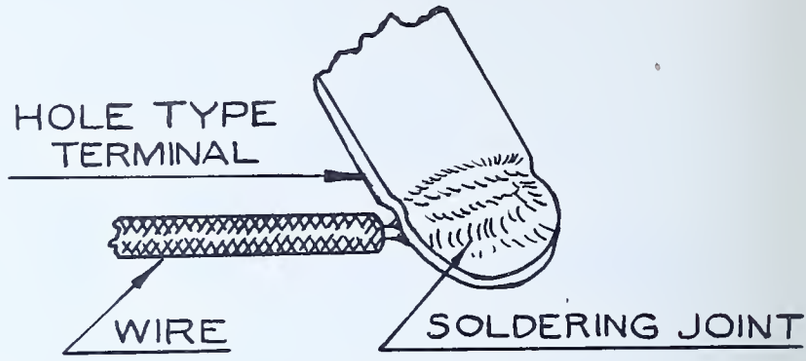

FIG.-30

Caution: Do not disturb wire while solder is cooling.

6. Crimp and solder other end of wire to lug A', covering wire and lug evenly with solder where the wire is crimped around the lug. See Reference Sheet E.

7. Have instructor check quality of work. If satisfactory, repeat procedure until wires are connected to each set of terminals, making all joints as uniform as possible.

8. Have instructor check finished job.

Note: If soldered connections are not satisfactory, remove the wires and repeat the entire procedure.

9. Remove all wires from terminal strips and clean terminals. Trim and save wires. To clean terminals, heat with iron until solder runs. Remove solder by tapping on table while solder is still molten.

C. SOLDERING WIRE TO SOCKET

Specifications:

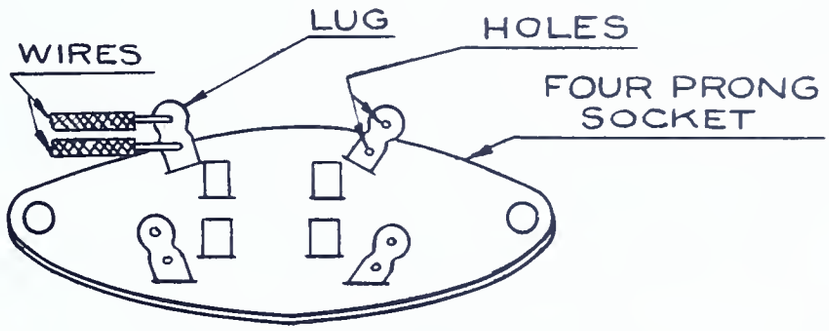

FIG.- 31

1. Eight wires to be crimped and soldered, two to each lug of a four prong socket, using one hole of lug for each wire as shown in Fig. 31.

2. Socket: one wafer four prong socket.

3. Wire: eight pieces of any type of solid wire available, about 4" long.

Procedure:

1. Crimp the ends of two wires to one lug of the four prong socket as shown in Fig. 31. See Reference Sheet E, Page 14.

2. Hold iron to lug and heat.

3. Melt a small amount of solder in lug and continue heating until solder runs smoothly over the crimped wire, filling the holes of the lug.

4. Remove iron without disturbing wire and allow to cool.

5. Trim (cut away) excess end of wire.

   Note: This should not be necessary if insulation is not pushed back too far in the beginning.

6. Have instructor inspect connection. If satisfactory, repeat operation and connect wires to each lug.

7. Have instructor check completed job; if satisfactory, remove all wires and clean terminals.

D. SOLDERING WIRE TO TERMINAL STRIPS IN TWO PLANES

Specifications:

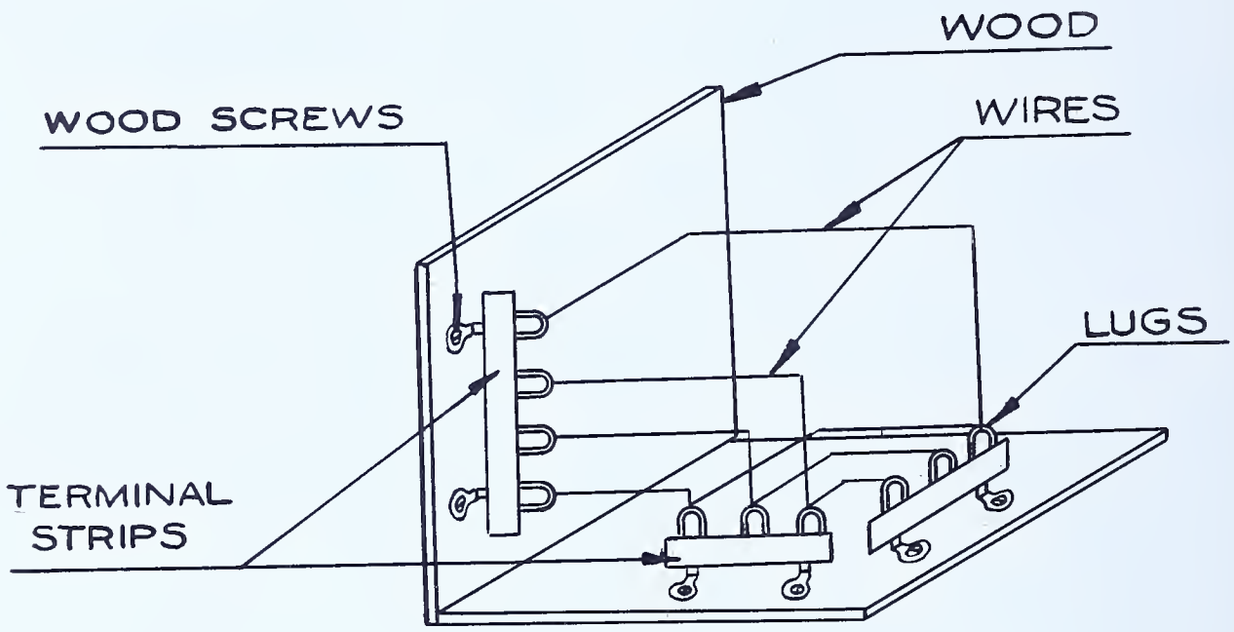

FIG.-32

1. Two pieces of wood to be fastened together at right angles with brads. See Fig. 32.

2. Three terminal strips (one four terminal strip and two three terminal strips) to be mounted on wood as shown in Fig. 32.

3. Wood: two pieces of wood approximately 3/8" x 4" x 6".

4. Wire: seven pieces of any type of solid wire available, varying in length to meet the need.

5. Brads: about six #16-1".

6. Seven wires to be crimped and soldered on terminals, connecting terminals as shown in Fig. 32.

Procedure:

1. Fasten the two pieces of wood together at right angles using small brads and hammer, and mount the terminal strips as shown in Fig. 32.

2. Place the pieces of wood in the position illustrated in Fig. 32 and do all work with them in the position shown.

3. From Fig. 32 select one wire to install. Measure and cut a length of wire which should be about one inch longer than is needed to extend from terminal to terminal selected.

4. Push back insulation about $\frac{1}{2}$" and crimp one end of wire to the terminal on one strip.

5. Bend wire to shape.

6. Push back insulation at other end and crimp wire to terminal of other strip.

7. Repeat procedure for the other wire connected to the same pair of terminals.

   Caution: When more than one wire is connected to a lug, all wires should be prepared and crimped around the lug before any soldering is done.

8. Solder terminals as done in Part B - steps 2, 3, 4, and 5.

9. Repeat procedure for remaining wires as shown in Fig. 32.

10. Dress all the leads; that is, arrange leads neatly.

E. SOLDERING WIRE TO A MALE PLUG

(an old tube base may be used in practice)

Specifications:

1. Four wires to be inserted and soldered in the four prongs of a male plug, one wire in each prong.

2. Plug: one four prong male plug.

3. Wire: four pieces of any type of solid wire available, about 4" long.

Procedure:

1. If necessary, remove any solder from base pins by heating them with an iron and tapping plug on table while solder is still molten.

2. Mount plug in a jig or bench vise.

3. Remove about $\frac{1}{2}$" insulation from the end of a piece of wire, and tin wire.

4. Hold the flat side of the tip of the iron against the tip end of a base pin and heat.

   Note: Use a clean tinned iron.

5. Apply a small amount of solder on iron and permit a small globule to run into the open end of prongs, but do not fill it with solder.

6. Continue heating the pin and insert the tinned end of the wire through the pin from the back and bend the wire at this point.

7. Cut off the excess wire.

8. Apply a drop of solder on the iron and touch up the open end of the pin so that it is smooth.

9. Have instructor inspect work.

10. Repeat with other base pins if satisfactory.

QUESTIONS

Place the answers to these questions in your notebook or on form as directed by instructor.

1. Why are electrical connections soldered?
2. What is the chief property of tin lead solder?
3. What is the preferred ratio of tin and lead in solder for radio work?
4. What are the functions of a flux?
5. In what form is the flux used in radio work?
6. What is the only type of flux permitted on radio equipment? Why are other types of fluxes prohibited?
7. What effect has rosin residue on soldered joints?
8. How is the residue of rosin removed in soldering a joint?
9. Name two methods of heating soldering irons. Which method is the more common?
10. How are electric irons rated?
11. Where is the element of an electric soldering iron located? What is its function?
12. How does continued heating affect the tip of an iron?
13. Why should the tip be removed occasionally?
14. Why is a heavy iron sometimes necessary?
15. Why are some tips shaped differently than other tips?

16. Why is it necessary to tin a soldering iron tip?

17. What causes a tip to become "pitted"?

18. What precautions should be taken in securing a tip in a vise?

19. Why is sandpaper preferred in preparing the tip for tinning?

20. What type of wire is the most convenient to use in radio work?

21. What precautions should be taken in removing insulation from any type of wire?

22. How should the enamel be removed from enamel covered wire?

23. What is Litz wire?

24. Explain how Litz wire is prepared for soldering.

25. What is the main use of tinsel wire? Why?

26. What is serving? Where and why is it used?

27. How are wires secured to terminals before soldering? Why?

28. What is a "cold soldered" joint? Why is it considered a poor connection?

29. How do you know when solder is set?

30. Should a soldered wire be moved immediately after soldering? Why?

31. Explain the procedure for crimping and soldering when more than one wire is connected to a lug.

JOB 2

CABLE FORMING

The many connections of a radio would provide a confusion of wiring unless some method of organizing those wires into grouped runs of cable were possible. The efficiency and neatness of this practice is obvious.

This unit presents instruction and jobs in various cabling skills.

CORDS AND CABLES

General Information:

Cords and cables are used to make connections between various pieces of radio equipment to supply power or to control the pieces of equipment so connected.

Cords and cables have varying numbers of conductors, depending upon the number necessary to perform the desired function.

The end of the cords and cables may be terminated in several ways:

1. With the ends of the conductor tinned and ready for soldering to terminal strips as in Fig. 1.

FIG.-1

2. With male or female plugs as in Fig. 2. These have as many contacts as necessary to accommodate the conductors in the cable.

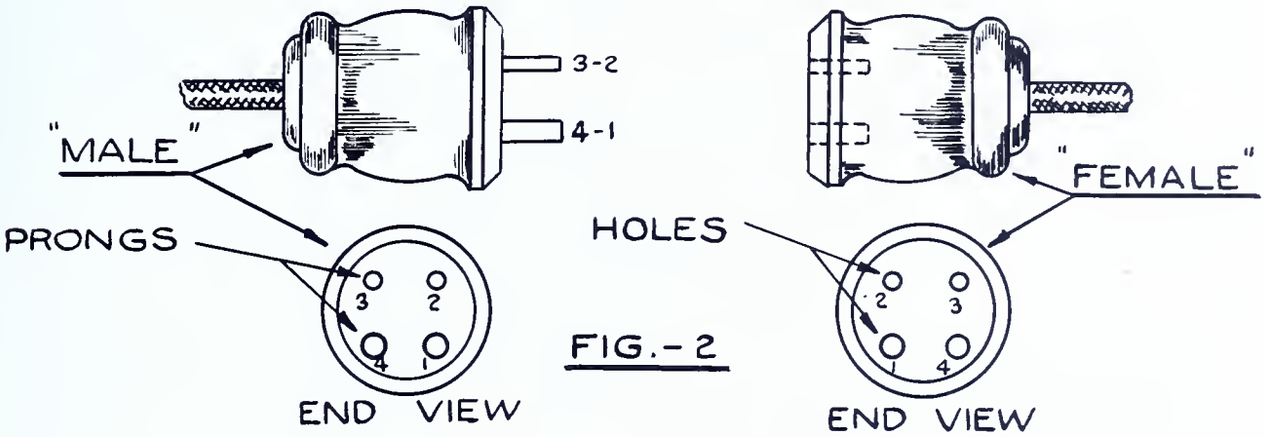

FIG.-2

3. With individual tips or lugs for each conductor as in Fig. 3.

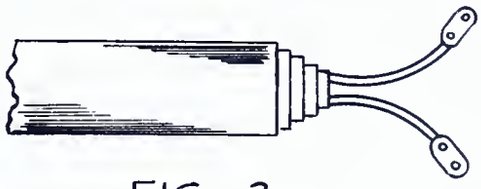

FIG.-3

In order to prevent mechanical injury to the insulation, the ends are wrapped with "serving" cord and then given a coat of shellac or other waterproofing. This is called serving.

In order to prevent electrical short circuits, it is important that the insulating covering be carefully removed and that no bare conductors be present in the finished job. Portions damaged accidentally must be served.

All conductors should be checked for continuity with an ohmmeter and should be checked against the blueprint to make sure the right conductors terminate at the proper lugs or terminals.

The term fabrication is used in referring to the process involving:

(1) Attaching conductors to designated plug contacts or lugs.

(2) Finishing ends (serving) to prevent mechanical wear and breakage.

A. TERMINATING CORDS AND CABLES

General Information:

Prepared cords and cables consist of one or more insulated wires covered with an outer sheathing of rubber, lead, closely woven cotton fabric, or wire mesh.

The individual wires in a cord are usually rubber covered, and at times there may be a cotton fabric covering the rubber. Surrounding the wires is cotton filler which protects the wire against rough usage but does not impair the flexibility of the cable. Only stranded wire is used in cables where flexibility is desired. Covering the wires and holding the filler in place is a layer of cotton fabric. The cotton fabric is then encased with a covering of rubber to provide flexibility, moisture-proofing and durability.

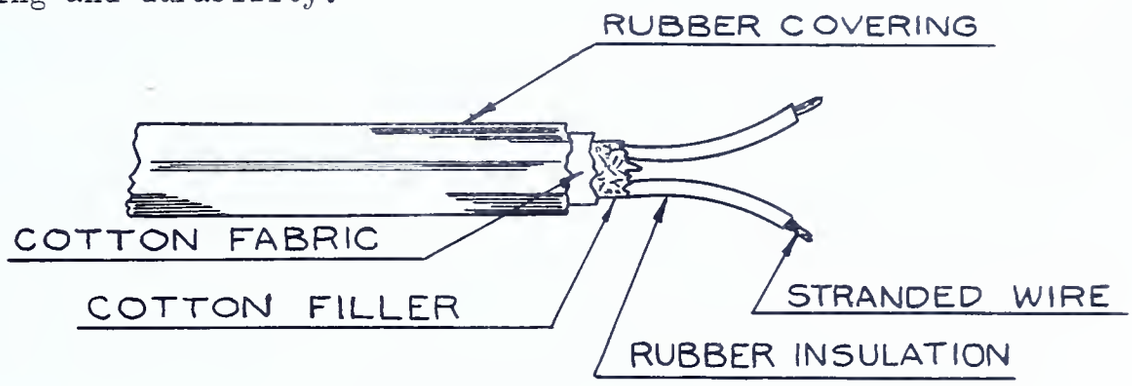

FIG.-4

If the cable is used in a circuit where shielding of the wire is necessary, a fine wire fabric covers the cotton fabric; the wire fabric in turn is covered by cotton fabric and a rubber outer covering. See Fig. 5.

Where cables are laid under ground and exposed to excessive moisture, lead is used for the outer sheathing.

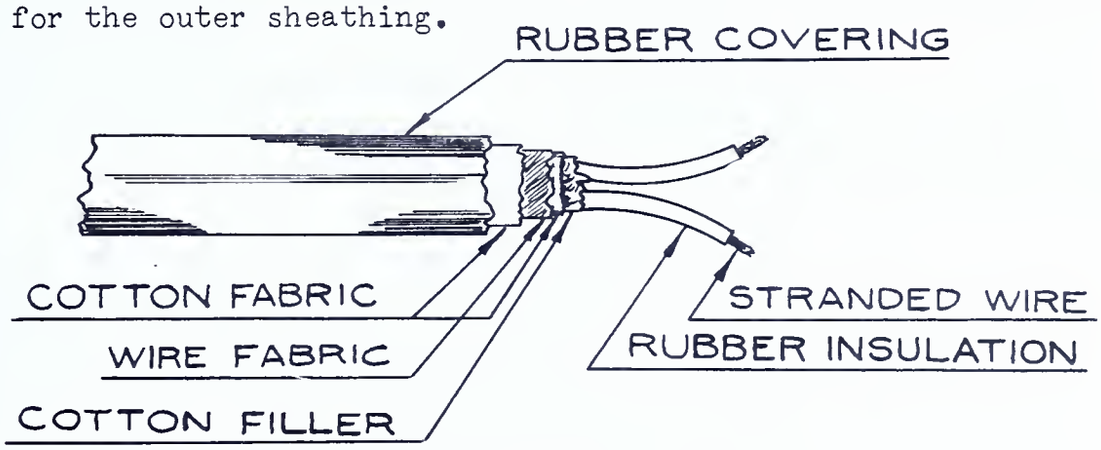

FIG.-5

Specifications:

1. Outer sheathing and filler material to be removed from a multi-conductor cabl
2. Cable to be served at ends with linen cord.
3. Cable to be terminate with:
   (a) spade lugs
   (b) male and female plugs

Tools needed:

1. Soldering iron
2. Diagonal cutters
3. Knife

Equipment needed:

1. Ohmmeter or phones and battery

Materials:

1. Three feet of any multi-conductor cable.
2. Eight spade lugs.
3. One male and one female plug (4 prongs) or 4 prong socket and old tube base.
4. Three feet of linen serving cord.
5. Shellac and brush.

Procedure:

1. Cut cable to desired length with diagonal cutters.

2. Remove sheath as follows:

   a. Measure off $1\frac{1}{2}$" from end of cable to where it is to be stripped.
   b. Cut through the outer sheath with a circular cut; be careful not to cut beyond the outer sheath as shown in Fig. 6. Use pen knife.

   Note: For sheathing made of braided wire on larger cables, use a fine toothed hack saw for cutting. Before sawing, bind each side of cut with tape to prevent fraying.

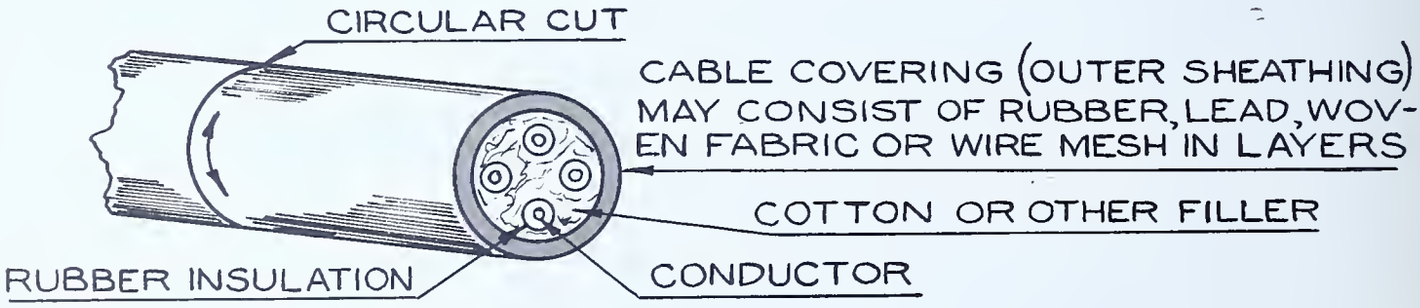

FIG.- 6

   c. Cut through the outer sheath from this cut to the end of the cable being careful not to cut beyond the outer sheath. Refer to Fig. 7.

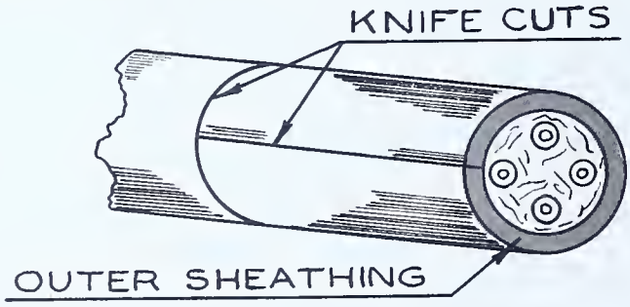

FIG.- 7

   d. Remove outer sheath by prying loose with knife.

3. Cut out any filler material between the individual conductors with diagonal cutters.

4. Fan out conductors and inspect insulation for nicks and cuts.

5. Bare the end of each conductor about $\frac{1}{4}$"; clean, twist, and tin thoroughly. See Fig. 8.

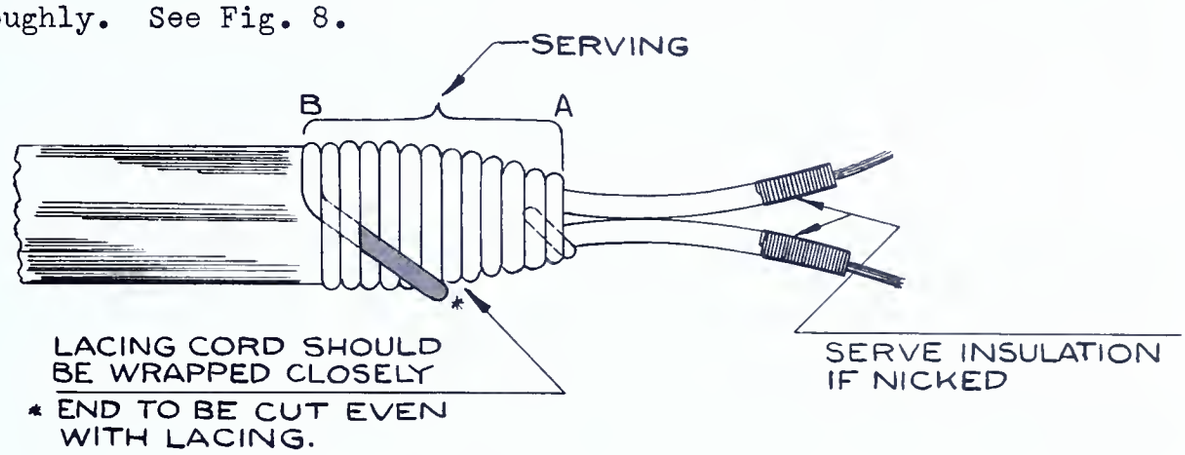

FIG.-8

6. Begin serving insulation at point A (see Fig. 8) by placing end of serving cord in position illustrated and wrapping two turns over it.

7. Continue wrapping the insulation from point A to B (see Fig. 8). This should be about $\frac{1}{4}$" beyond where circular cut, as shown in Fig. 6, was made - more in cases where larger cables are used.

   Note: Keep each turn against the preceding one and wrap tightly so that the rubber covering is slightly compressed.

8. Terminate cord as follows:

   a. Hold, with the left hand, all but the last two turns, to prevent cord from loosening.
   b. Wrap the last two turns loosely with the right hand.
   c. Slip the end of the cord under the two loose turns.
   d. Tighten the two loose turns over the end of the cord.
   e. Pull end of cord tightly, removing all slack in serving.
   f. Trim end of cord where it leaves cable, using diagonal cutters or knife.

9. Serve similarly any nicks in conductor insulation as shown in Fig. 8.

10. Apply a light even coat of shellac on wrapping and allow to dry.

    Note: Instructor should first demonstrate the application of shellac. Apply just enough to cover surface uniformly, but do not soak wire.

11. Prepare ends of other cables in same manner if more than one is to be made.

12. Another commonly used method of serving is illustrated in Fig. 9.

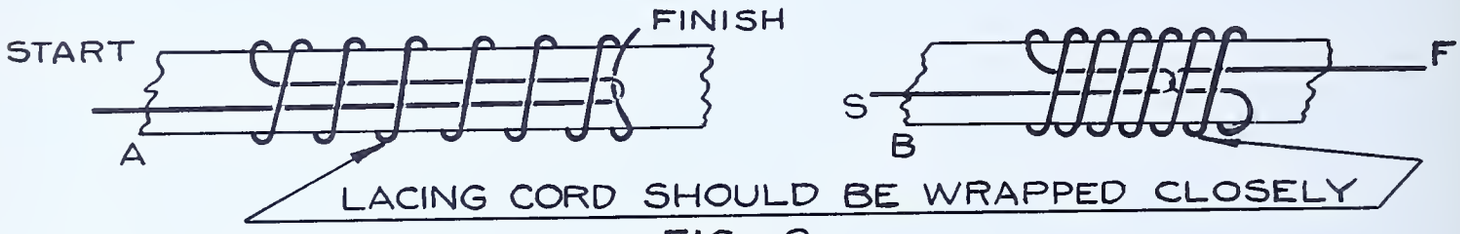

FIG.-9

a. Terminating Cable with Spade Lugs

13. Solder a spade lug to each conductor of the cable (both ends). See Reference E on Crimping Wire.

14. Have instructor check quality of work; and if approved, remove lugs and use same cable in next part.

b. Terminating Cable with Male and Female Plugs

13. Attach a male plug at one end and a female plug at the other end of the cable, connecting each conductor to a separate pin or contact, being sure that each conductor is connected between a correspondingly numbered pin and contact as shown in Fig. 2, Page 31.

14. Test for mechanical strength by pulling lightly on each wire.

Caution: Do not pull hard enough to break wire or lug of female plug.

15. Present work to instructor for inspection and grading. He may test with instrument to determine continuity and short circuits.

16. Disassemble and return cable and parts to stock room.

B. CABLING PRACTICE

General Information:

Where several wires run close together along a similar path, they are usually "formed" by grasping with the hand into a compact group, and then laced together with cord. See Fig. 10. This lacing helps support the wires so that they will remain in position better and present a neat appearance.

FIG.-10

Laced cables are used extensively for inter-chassis connections, in rack-and-panel construction, and, to a limited extent, in chassis wiring for low frequency and power circuits.

In forming a cable, the wires should be parallel and should not be twisted. The stitch used in lacing the cable is known as a lock stitch; between each lock stitch a running stitch is used. The running stitch should be parallel to the wires in the cable and should not be wound around the cable, while the lock stitch, if properly made, should keep the running stitch pressed against the cable. See Fig. 16, Page 39.

Specifications:

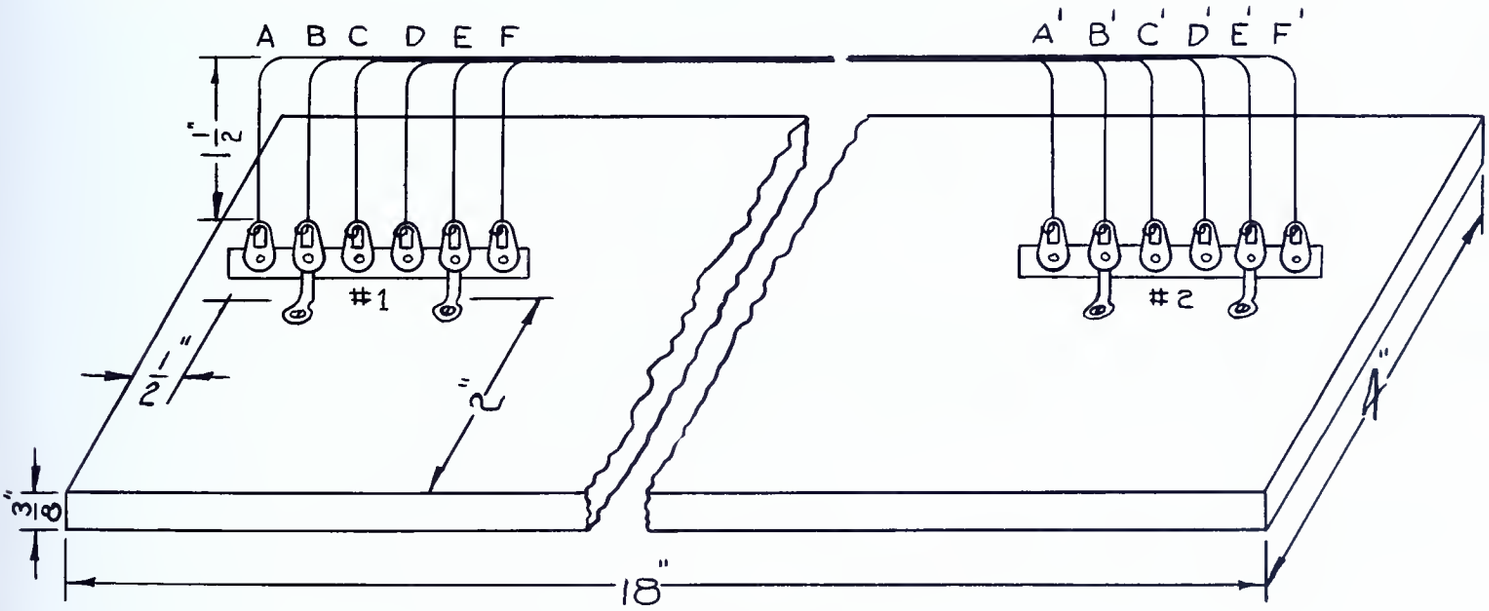

FIG.-11

1. Six pieces of any solid insulated wire, about 19" long, to be connected between corresponding terminals on #1 and #2 terminal strips and formed. Wire as shown in Fig. 11.

2. The six wires are to be formed and laced. These operations will include starting, terminating and branching.

Tools needed:

1. Soldering iron
2. Long-nose pliers
3. Diagonal cutters
4. Screw driver

Materials needed:

1. Rosin core solder
2. Ten feet of any solid insulated wire
3. Two terminal strips (6 terminals)
4. Two terminal strips (3 terminals)
5. Wood approximately 3/8" x 4" x 18"
6. Six R.H. wood screws #4 - 3/8"
7. Waxed linen lacing cord
8. Shellac and brush

Procedures:

I. Forming and Lacing a Cable

1. Mount terminal strips on wood using wood screws as shown in Fig. 11.

2. Cut six wires to proper length so that they extend from #1 terminal strip to #2 terminal strip, following "hook-up" in Fig. 11.

   Note: Wires running between the bends should be kept as close together as possible.

3. Solder wires to terminal strips.

4. "Form" wires between bends into a rounded cable by grasping with the hand

   Note: See that the wires from terminal lugs to cable are parallel, and that they run parallel and straight in the cable; check to see that they are not crossed or twisted.

5. Cut lacing cord $2\frac{1}{2}$ times as long as length of cable to be laced.

6. Hold end of cord on cable as indicated in Fig. 12.

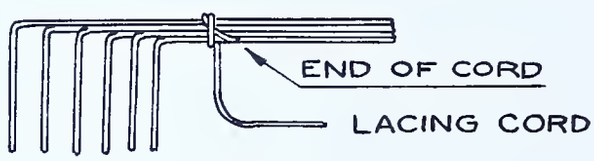

FIG.-12

7. Wrap about 12 turns tightly over the cable as shown in Fig. 13.

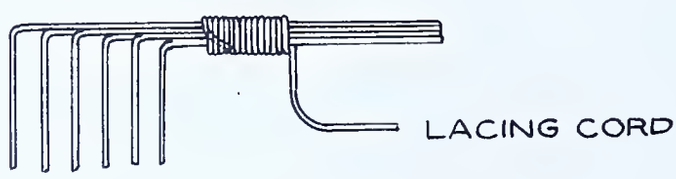

FIG.-13

8. Form lock stitch using forefinger and thumb of left hand to form loop and right hand to pass cord through loop as shown in Fig. 14.

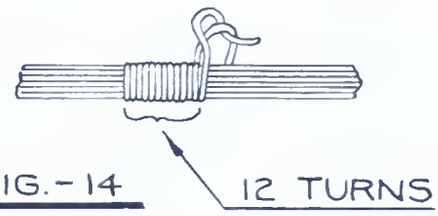

FIG.-14

9. Adjust position of lock stitch to most accessible side of cable and pull up tight.

10. Make a running stitch $\frac{1}{2}$" long, which is a convenient distance between lock stitches See Fig. 15.

11. Form another lock stitch, adjusting it so that the running stitch is parallel to the axis of the cable as shown in Fig. 15 and then pull up tight.

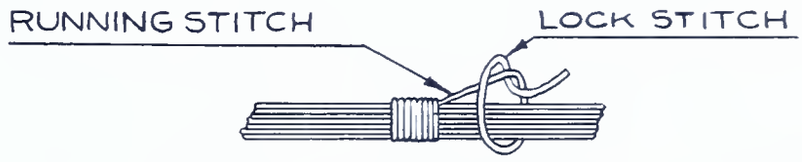

FIG.-15

12. Repeat the lock stitch every half inch as illustrated in Fig. 16, keeping the running stitches in line as well as parallel to the axis of the cable.

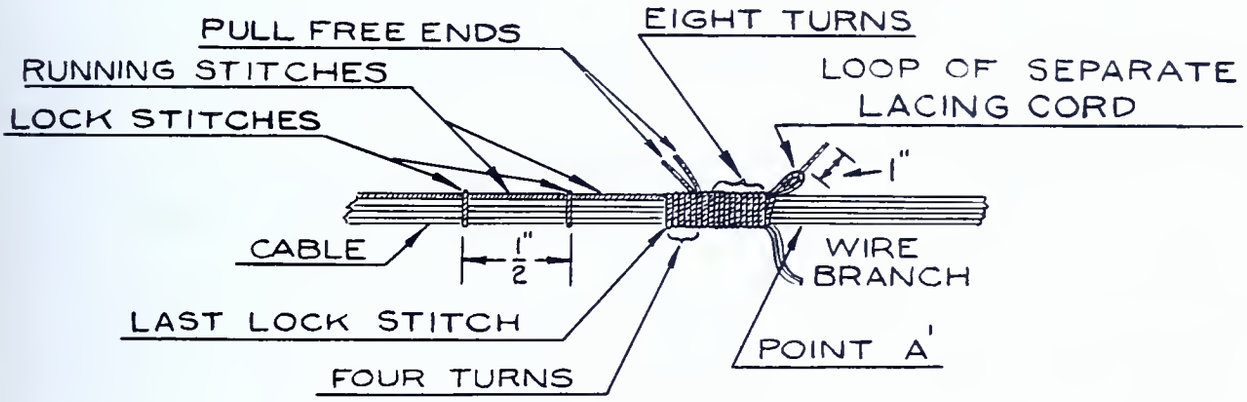

FIG.-16

Terminate cord before point A' (see Fig. 11, Page 37) by using the following procedure:

13. Wrap four adjacent turns tightly around cable after the last lock stitch in preparation for finishing. Refer to Fig. 16.

14. Form a loop from a separate 3-inch piece of lacing cord and wrap eight turns over this loop as shown in Fig. 16.

15. Cut off any cord in excess of one inch beyond last turn, and pass end of cord through loop as illustrated in Fig. 16.

16. Pull loop out by the free ends, thereby locking end of cord under the last eight turns.

17. Trim any excess loose ends, and present work to instructor for comment.

18. Remove lacing cord from cable.

II. Lacing A Terminating Cable

Note: Use same cable as in preceding job.

1. Cut new length of cord.
2. Reform wires, if necessary.
3. Tie end of lacing cord at point B, catching both wires by making a square knot followed by two lock stitches. See Fig. 17.
4. Make next lock stitch at point C, catching wire C. See Fig. 18.
5. Make lock stitch at point D, catching wire D.
6. Lace remainder of cable, catching each wire with lock stitch as it enters or leaves cable. Keep lock stitches evenly spaced where possible.
7. Terminate cable at point E' using double lock stitch and square knot in that order. See Fig. 19.
8. Trim end of cord and present work to instructor for inspection.
9. Remove lacing cor from cable when work is judged satisfactory.

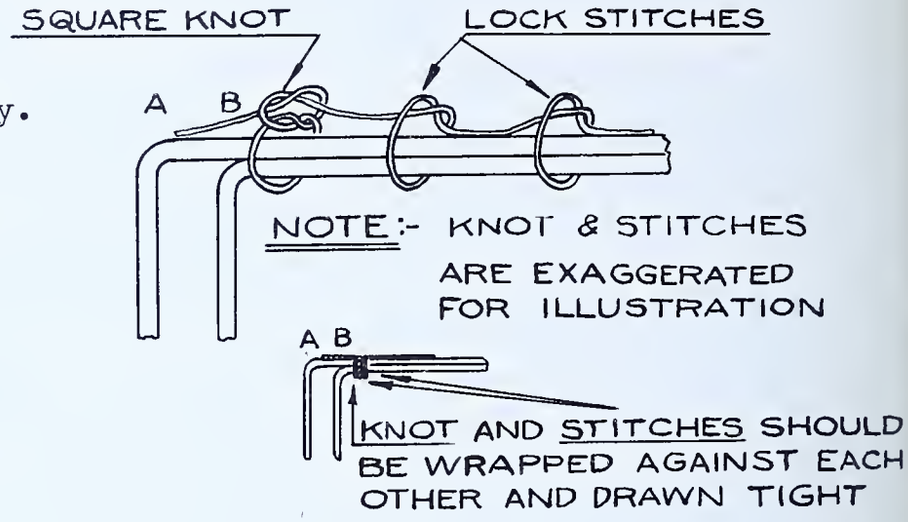

FIG.-17

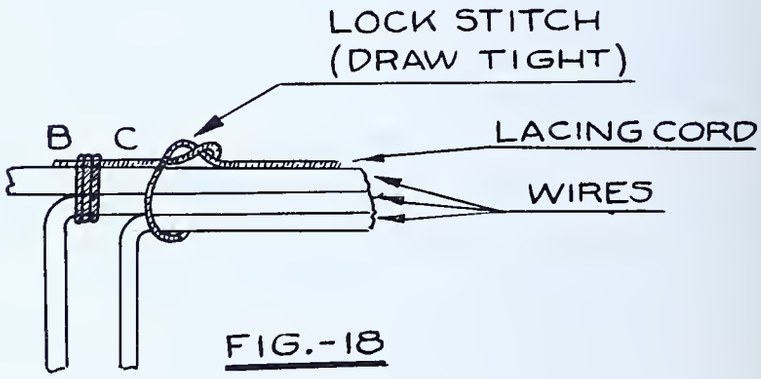

FIG.-18

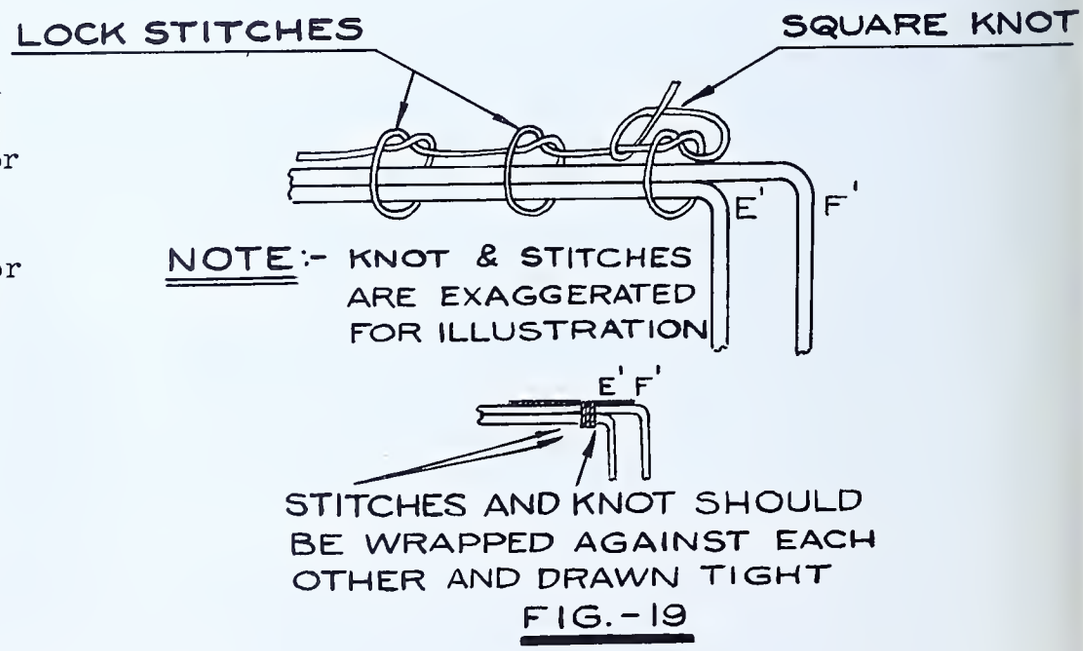

FIG.-19

III. Branched Cable Forming and Lacing

Since a group of laced wires seldom runs between similarly grouped points, it may be necessary to form branches. If the branch has two or more wires it, too, may be laced. Cables may have any number of branches and sub-branches. Wire used for such complex cables have colored threads woven into the cotton cover for identification.

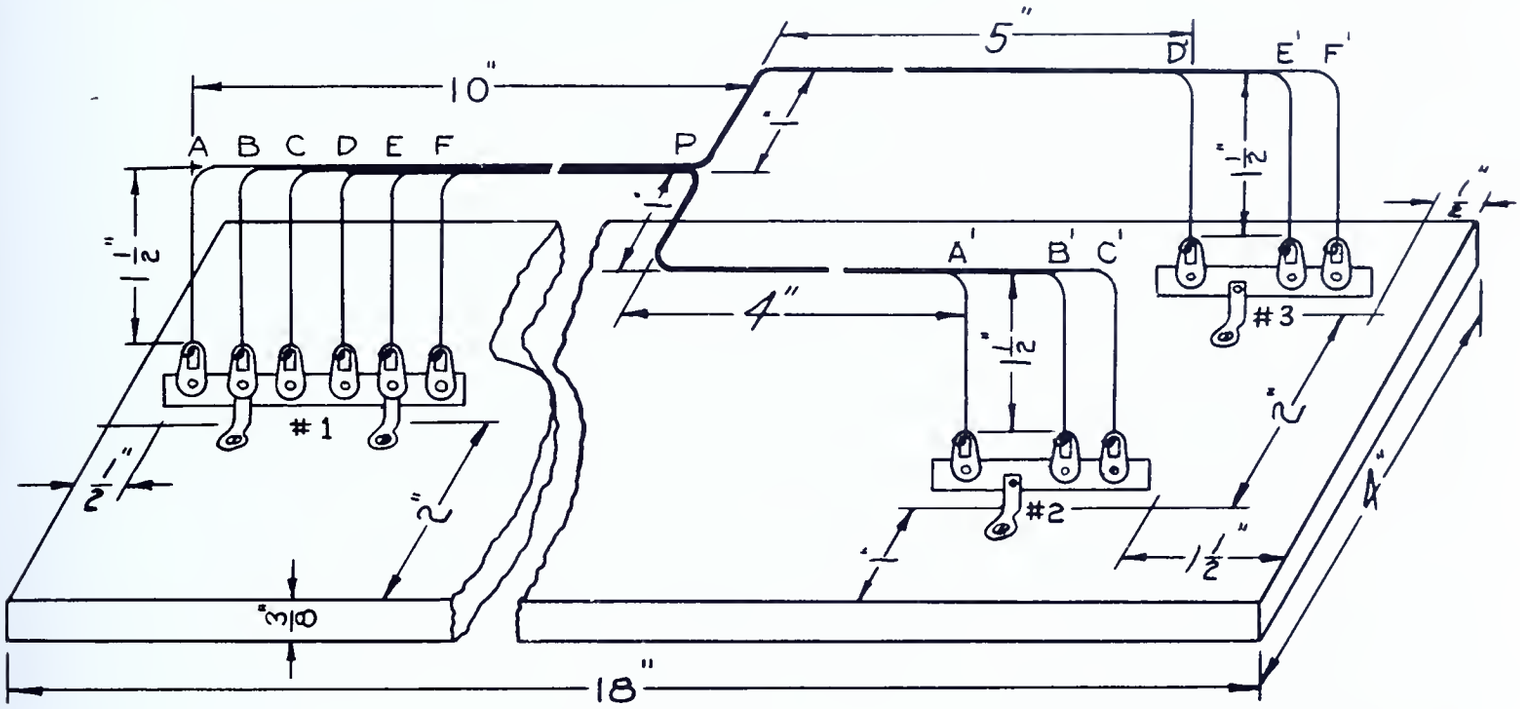

FIG.-20

Note: Use same cable and base as in previous job.

1. Disconnect wires from right hand terminal strip.

2. Remove right hand six lug terminal strip.

3. Mount two three lug terminal strips as shown in Fig. 20.

4. Solder disconnected wires to new terminal strips and form into cable as shown in Fig. 20.

5. Lace cable from point B to point P as in Section II of this unit.

6. In preparation for branching wires from the main cable, make a lock stitch about $\frac{1}{4}$" from the last lock stitch. See Fig. 21.

   Note: In the event that only one wire is branched from the main cable, it is branched at a lock stitch without any variation in the number of wrappings or distance between lock stitches.

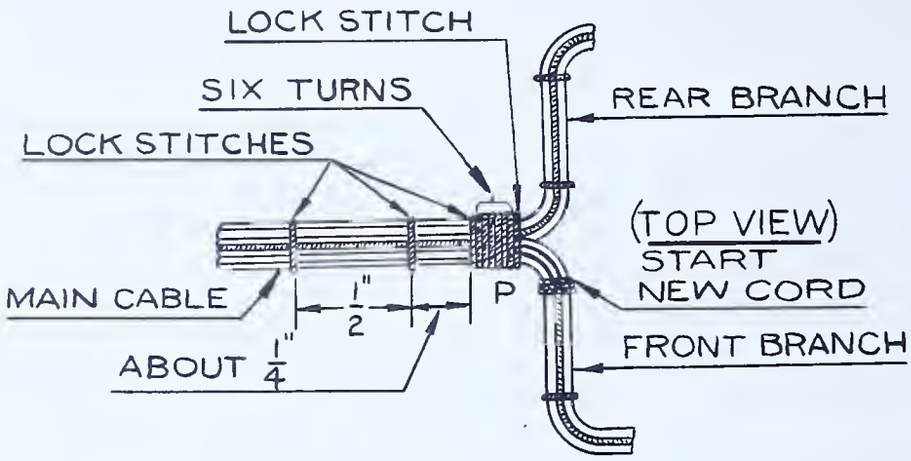

FIG.-21

7. After this lock stitch wrap about six adjacent turns tightly around cable as shown in Fig. 21.

8. Make another lock stitch adjacent to this wrapping as illustrated.

9. Check the branches to be sure that they are well formed as shown in Fig. 21, and then continue lacing along the rear branch as before.

10. Lace front branch, starting where branch leaves main cable at point P (see Fig. 21).

11. Trim any excess loose ends.

12. Apply coat of shellac on all lacing.

    Note: Do not soak wires with shellac, but cover the lacing sufficiently to keep it from slipping.

13. Dress cable close to board as shown in Fig. 22.

    Note: Be sure that all bends are made evenly and that wires entering cable are parallel. No kinks should exist in cable.

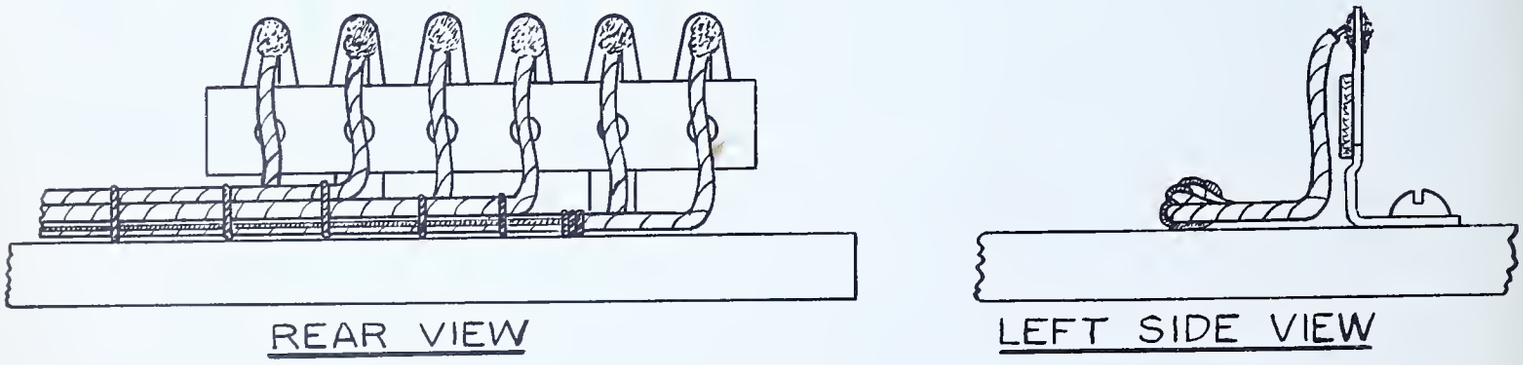

FIG.-22

QUESTIONS

Place the answers to these questions in your notebook or on form as directed by instructor.

1. Name three ways in which cords and cables may be terminated.
2. What is meant by serving?
3. Why are cables served?
4. What processes are involved in cord fabrication?
5. What precautions should be taken in stripping a cable?
6. How is braided wire sheathing removed?
7. How are pins and female contacts identified on plugs?
8. Where are laced cables used in radios?
9. What is the purpose of a lock stitch?
10. What is the purpose of a running stitch?
11. Explain a method of terminating lacing on a cable. Make sketches if needed.
12. Explain how cable is wrapped when wires are branched from the main cable.
13. What is the procedure for lacing when only one wire is branched from the main cable?
14. When are branched cables laced?
15. What finish is used on laced cables?

JOB 3

SCREWS, NUTS, BOLTS AND WASHERS USED IN RADIO WORK

To expedite the process of disassembling sets for salvage, the various screws, nuts, etc. are usually all dropped into a common container. They are later sorted and placed in the proper storage bins.

An understanding of the types and applications of the various screws, nuts, bolts and washers is the purpose of this unit. The job is to sort a tray of mixed hardware of this kind.

SCREWS, BOLTS, NUTS, AND WASHERS USED IN RADIO WORK

1. SCREWS AND BOLTS:

Screws and bolts are fastening devices which depend for their hold upon threads spirally cut into the stock of the metal.

The standard direction of thread is such that turning the head in a clockwise direction tightens the screw or bolt, and counter-clockwise loosens it.

They will vary as to head, material, finish, body, length, diameter or thickness, and "pitch" of the thread. These specifications must be provided in ordering screws or bolts.

A. HEAD

(1) SHAPE - depends upon purpose, surface to which it is fastened, and desired appearance.

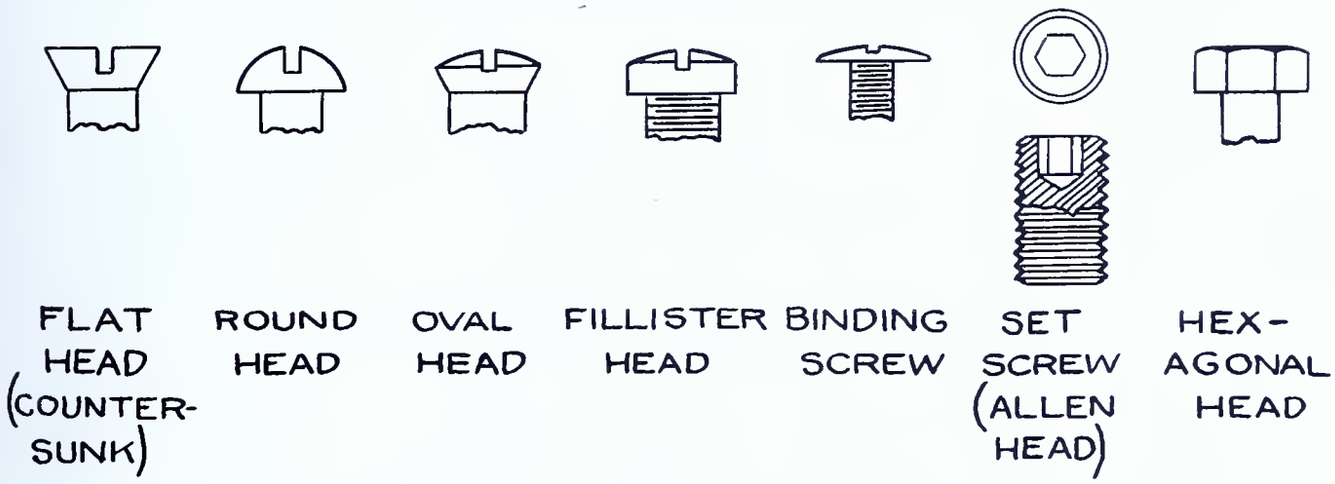

FIG. 1 — TYPES OF SCREW HEADS

a. Flat Head - Used where head is to be flush with or below surface. Material must be thick enough to permit depth of head to be countersunk to that depth.

b. Round Head - Most widely used type, usually on flat surfaces.

c. Oval Head - Combines the first two, frequently preferred for purpose of finish appearance. Requires careful use of countersink to provide exact depth for head of screw.

d. Fillister Head - Where added head strength is required, such as in holding relatively heavy machine parts.

e. Binding Head Screw - A machine screw with large flat head, used mostly in terminal strips, to give greater area for wire contact.

f. Set Screw - Small screws with no protruding head, used mostly as a locking device. One use is where the tip of the screw goes through another piece to engage a shaft, preventing slippage of collar on shaft. Used where limited space does not permit regular type screw head to be used.

g. Hexagonal Head - Fastened with a hex, socket, or end wrench, permits added pulling tension on head. This presents the danger of stripping threads with too much wrench leverage; there is also the disadvantage of the added clearance required for applying special tools.

(2) SLOT

a. Slot Head - Standard type, requiring ordinary screw driver. Care should be taken not to burr or break the head of screw.

b. Allen Head - A hexagonal socket provides the method of turning, requiring a special "Allen" wrench. See Fig. 1.

c. "Recessed Head" - A cross slot which is in the center of the screw head. See Fig. 2. Provides neater appearance, greater strength of screw head, and more opportunity for use of power driver without dangerous slipping-off. Special screw driver is required to fit this type. Because of the above advantages, is in growing use, particularly on production lines.

RECESSED HEAD

FIG. 2

B. MATERIAL

Soft iron, steel, brass.

Selection depends upon strength or finish requirements. Where the screw or bolt is part of the circuit, it is made of brass; where strength is essential, it is made of steel.

C. FINISH

Blued iron, cadmium, galvanized, nickel plate, chromium plate, dull, bright.

Selection depends upon material and place of use.

D. BODY

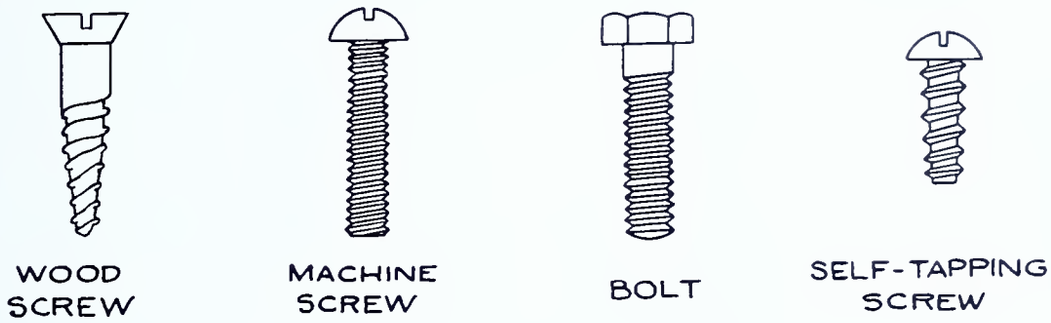

FIG. 3 — TYPES OF SCREWS

(1) Wood Screw

Body tapered to a sharp point which will engage itself in soft wood under mild pressure and rotation of screw driver. In hard wood, it is necessary to drill a small hole to facilitate entry of the screw and to prevent splitting the wood fibres. Wood screws are used to fasten parts to wood bases.

(2) Machine Screw

This type is most widely used in radio work. The body is straight and threads are cut its entire length. It is fastened by means of a nut or a suitably tapped hole. The "pitch" (number of threads per inch) of the screw, and the nut or tapped hole, therefore must be the same.

Machine screws in combination with washers, lock washers and nuts (or tapped holes) are used to fasten parts in place.

(3) Bolt

Similar to machine screw in construction. The term "bolt" applies in general to sizes thicker than 1/4".

(4) Self-tapping Screws

Case hardened sharp threads for use in thin iron or aluminum stock. End of screw slightly tapered to permit starting in holes punched or drilled in metal. Hole is made slightly smaller than shaft of screw, which cuts its own thread as in a tapping operation. Does not require a nut or tapped hole although a special nut can be obtained if required.

E. LENGTH

The length of most screws and bolts is the distance from the underside of the head to the point or small end. The length of flat head screws is measured from the surface of the head to the point, and the length of the oval type is from the edge of greatest diameter to its point.

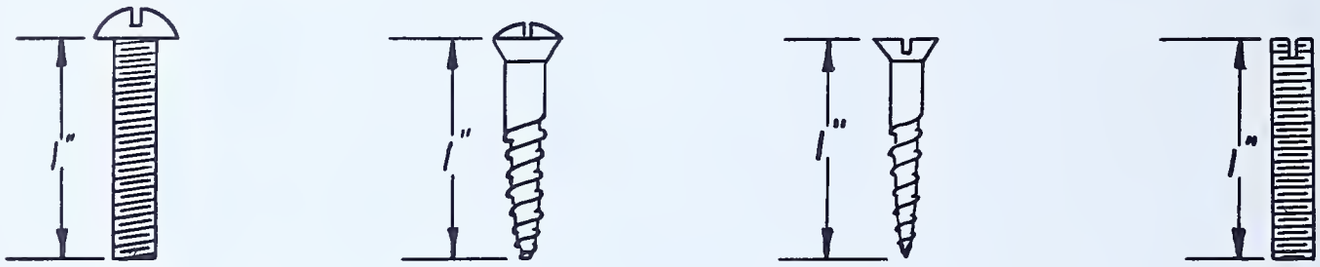

FIG. 4 — LENGTH OF SCREWS

The stock length of screws is by quarters of an inch from 3" to 1", and by eighths from 1" to 1/8".

In specifying screw sizes, the length is given first.

F. DIAMETER

The thickness or diameter is usually indicated by a gauge number. Thickness dimension in inches is seldom used. For sizes of various gauge numbers, see Table 1, Reference I, "Sizes of Drills and Taps", Page 59.

The gauge number follows the length in screw specifications, thus 1" #10 or 5/8" #4.

G. PITCH

The number of threads per inch determines the "pitch" of a screw. This is of great importance in using machine screws and bolts since the nut or tapped hole must correspond to fit not only in diameter but in pitch. This number follows the gauge number in specifications, thus 1" #10 - 24 is a screw one inch long, #10 thickness with 24 threads per inch, or 5/8" #6 - 32 is five-eighths of an inch long, gauge number 6, with 32 threads per inch.

The most commonly used pitch for machine screws in radio construction is 32 threads per inch.

In the machine trades, two types of standard threads have been established under the heading of National Coarse (N.C.) and National Fine (N.F.). Sometimes, therefore, a screw may be specified as 1" #6 N.F. Consulting the National Fine Table, one finds that the #6 screw has 40 threads per inch according to this standard. A #6 N.C. is found on the National Coarse table to have 32 threads per inch.

H. SPECIFICATION

Example - Hexagonal Head Brass Machine Screw 1" #6 - 32.

2. NUTS

A nut is a piece of metal which has a threaded hole through its center, made to fit the thread of a bolt or machine screw. They are classified according to -

A. SHAPE -

FIG. 5 — TYPES OF NUTS

* - A "fibre locknut" in growing use, provides a nut which will not vibrate loose - can be removed with tools, however, same as any nut. Has a fibre insert which eliminates need for lock washers.

B. SIZE OF HOLE - must correspond to bolt or screw used.

C. NUMBER OF THREADS PER INCH - must correspond to pitch of bolt or screw

D. MATERIAL AND FINISH - usually same as bolt.

3. WASHERS

A. FLAT WASHERS

Washers are used to distribute the pressure of the screw head over a larger area, thus giving more holding power to the screw and protecting the edges of the drilled hole from being damaged by the screw head. Washers are usually made of steel and are sometimes plated with brass or nickel.

B. LOCK WASHERS

Unless some special type locknut as shown below, Fig. 6, is used, the ordinary nut will vibrate loose under the jolting movements of field conditions. The addition of a second nut, tightened over the first one, will prevent this, but the usual device is a lock washer placed under an ordinary flat washer, as well as assuring a permanently tight fastening. Lock washers should not be placed under the head of a screw, only under a nut.

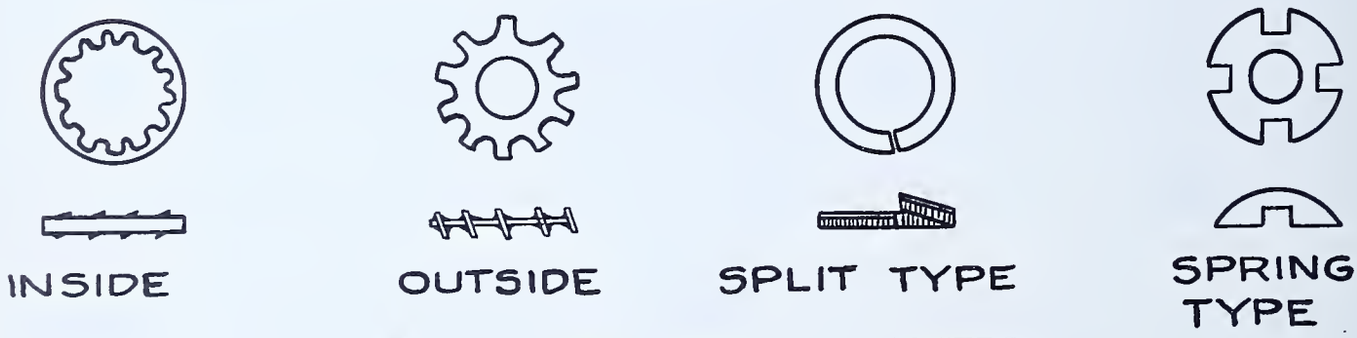

FIG. 6 — TYPES OF LOCK WASHERS

(1) Inside lock washers are so stamped that sharp projections protrude to engage the metal. They take up less room than other lock washers but do not grip as well as the other types.

(2) Outside lock washers have projections on the outer edge, and when the nut is drawn up on the screw, the teeth on the rim of the lock washer are partially forced into the metal of the chassis.

(3) Split Type lock washers are made of a spring type steel as pictured above. When secured in place they provide a spring pressure on the nut, thereby preventing its loosening. loosening.

(4) Spring Type lock washer, sometimes called spring type nuts, are made of spring steel or brass, or thin sheet steel, and are constructed in a semi-spherical shape. This type is easier to use but its grip is not too sure; it is used for special tensioning purposes rather than purely as a lock washer.

SORTING HARDWARE

Tools needed:

1. Steel Rule
2. Thread gauge, if available
3. Sorting trays
4. Table of standard screws and bolt description
5. Calipers

Materials needed:

1. 5 lbs. assorted sizes and finishes of nuts, bolts, screws, flat and lock washers.

Procedure: Study reference sheets on NUTS, BOLTS AND SCREWS

1. Arrange trays in a semi-circle within arm's reach.

2. Place an assortment of nuts, etc. on the table and spread them out as much as possible within the semi-circle formed by the sorting trays.

3. Use one tray for screws, one for washers, etc.

4. Separate into proper trays, as screws, bolts, washers, rivets, etc.

5. Take all the washers and classify them as to types and then sizes within each type.

6. Repeat for screws, bolts, and nuts.

   Note:
   It may be helpful to have some screws and bolts mounted through a plate to be used for quick checking of internal diameter and thread. See sketch, Fig. 7.

7. Separate screws and nuts according thread. Use a thread gauge if available, or count number of threads per inch.

   Note:
   In checking the thread count of a nut, apply on various known screw sizes until fit is obtained. (Be sure this is not a forced fit).

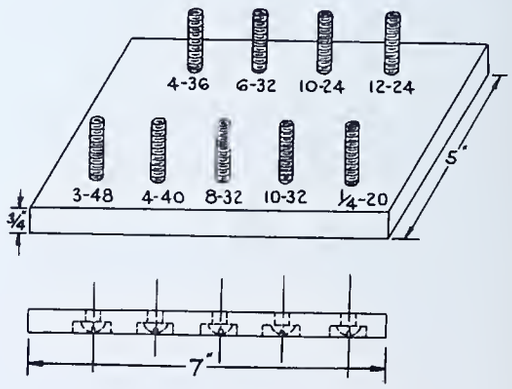

FIG. 7

QUESTIONS

Place the answers to these questions in your notebook or on form as directed by instructor.

1. In radio, what is the most widely used type (body) of screw?
2. What type of screw is used on a terminal board?
3. Why are Recessed-head screws used?
4. For heavy mounting, of what material should the screw be made?
5. What information should be provided in specifying:
   (a) A machine screw?
   (b) A wood screw?
6. Where can a self tapping screw be used? Explain.
7. Explain how machine screws are numbered.
8. Name three kinds of nuts.
9. What is the purpose of a flat washer?
10. Why are lock washers used?
11. Where are lock washers placed?
12. Does the description of Roundhead Brass $1\frac{1}{2}$" #8-32 apply to a machine or wood screw?
13. The description Roundhead Blued 2" #12 applies to what type screw?
14. How is the length of a round head screw measured? An oval head screw? A flat head Screw? A set screw?

JOB 4

DRILLING AND TAPPING

This unit presents experiences in use of the basic metal working tools. The drill, tap, hacksaw, file, and micrometer are discussed here. The job application of making a drill and tap gauge provides some practice in the use of tools as well as a useful shop possession.

SIZES OF DRILLS AND TAPS

DRILL SIZES:

Three systems of size classifications are used for metal drills. The size is usually marked on the shank of all but the very small drills. Where the marking is not readable a drill gauge or micrometer should be used to determine the size.

(1) Number Size

The most commonly used designation for the smaller drills is by numbers from #1 to #80. Chart follows. Note that the larger the drill number the smaller is the drill.

DRILL SIZE-DECIMAL EQUIVALENTS
NUMBERED DRILLS

Drill No.	Diam. In.	Drill No.	Diam. In.	Drill No.	Diam. In.
1	.2280	28	.1405	55	.0520
2	.2210	29	.1360	56	.0465
3	.2130	30	.1285	57	.0430
4	.2090	31	.1200	58	.0420
5	.2055	32	.1160	59	.0410
6	.2040	33	.1130	60	.0400
7	.2010	34	.1110	61	.0390
8	.1990	35	.1100	62	.0380
9	.1960	36	.1065	63	.0370
10	.1935	37	.1040	64	.0360
11	.1910	38	.1015	65	.0350
12	.1890	39	.0995	66	.0330
13	.1850	40	.0980	67	.0320
14	.1820	41	.0960	68	.0310
15	.1800	42	.0935	69	.0292
16	.1770	43	.0890	70	.0280
17	.1730	44	.0860	71	.0260
18	.1695	45	.0820	72	.0250
19	.1660	46	.0810	73	.0240
20	.1610	47	.0785	74	.0225
21	.1590	48	.0760	75	.0210
22	.1570	49	.0730	76	.0200
23	.1540	50	.0700	77	.0180
24	.1520	51	.0670	78	.0160
25	.1495	52	.0635	79	.0145
26	.1470	53	.0595	80	.0135
27	.1440	54	.0550		

(2) Letter Sizes

DRILL SIZE-DECIMAL EQUIVALENTS
LETTERED DRILLS

No. Drill	In. Diam.	No. Drill	In. Diam.	No. Drill	In. Diam.
A	.234	J	.277	S	.348
B	.238	K	.281	T	.358
C	.242	L	.290	U	.368
D	.246	M	.295	V	.377
E	.250	N	.302	W	.386
F	.257	O	.316	X	.397
G	.261	P	.323	Y	.404
H	.266	Q	.332	Z	.413
I	.272	R	.339		

(3) Fractional Designations

Range by 1/64ths, from 1/32 of an inch to 1 inch.

CLEARANCE DRILL

A "clearance drill" or "body drill" is that size which makes a hole just large enough to permit a specified screw to fit without engaging the threads. This hole is slightly larger than the outside diameter of the threads. Thus the clearance drill for a #5-40 (.125") screw is #29 (.136"), see table on next page.

TAP DRILL

There must be a hole drilled into the metal for the "root" of the screw, (See Fig. 1) with threads cut into the sides of that hole which permit entry of the threads of the bolt or screw. The hole for the "root" or "minor" diameter of the screw therefore is smaller than the body of the screw. This size is known as the "Tap Drill Size" for a particular screw, thus the #5-40 screw requires a #38 (.1015") tap drill, see table on next page.

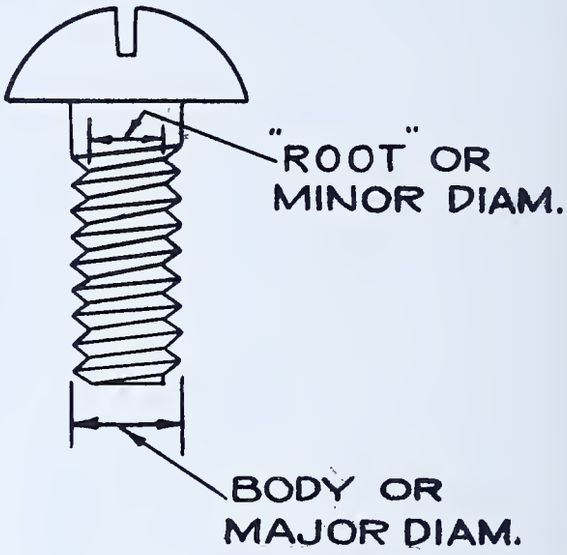

FIG. 1

THE TAP

The tap is the tool used for cutting threads to receive a machine screw. These threads are cut into the sides of the hole which has been drilled for the root of the screw, (the "minor diameter".)

Taps are numbered the same as the screw, thus a #5-40 tap is used to cut the thread to receive a #5-40 screw. Therefore the outer diameter (screw size #5) and the pitch of the thread (40 per inch) must be known before drilling and tapping.

The tap used most frequently for radio work is the "plug" type. See Fig. 4. There is also a "taper" tap and a "bottoming" tap.

The Tap Wrench - The tap is held in a special tool known as the "tap wrench". Two types are illustrated below.

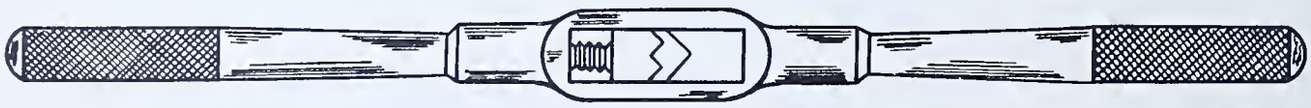

ADJUSTABLE TAP WRENCH
FIG. 2

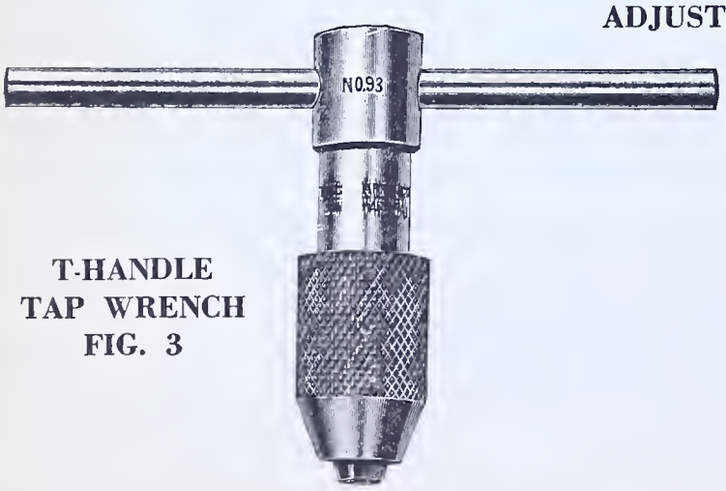

T-HANDLE
TAP WRENCH
FIG. 3

PLUG TYPE
TAP
FIG. 4

MACHINE SCREW CLEARANCE AND TAP SIZES

SIZE OF SCREW	NUMBER OF THREADS	DIAMETER OF SCREW	TAP HOLES		CLEARANCE HOLES	
			SIZE OF TAP DRILL	SIZE IN DECIMAL	CLEARANCE DRILL OR BODY DRILL	SIZE IN DECIMAL
2	56	.086	50	.070	42	.093
2	64	.086	50	.070	42	.093
3	48	.099 x	47	.0785	37	.104
3	56	.099	45	.082	37	.104
4	36	.112 x	44	.086	31	.120
4	40	.112 x	43	.089	31	.120
4	48	.112	42	.0935	31	.120
5	40	.125 x	38	.1015	29	.136
5	44	.125	37	.104	29	.136
6	32	.138 x	36	.110	27	.144
6	40	.138	33	.113	27	.144
8	32	.164 x	29	.136	18	.169
8	36	.164	29	.136	18	.169
10	24	.190 x	25	.1495	9	.196
10	32	.190 x	21	.159	9	.196
12	24	.216	16	.177	2	.221
12	28	.216 x	14	.182	2	.221
14	20	.242	10	.1935	1/4	.250
14	24	.242	7	.201	1/4	.250
1/4	20	.250 x	7	.201	17/64	.266
1/4	28	.250 x	3	.213	17/64	.266
5/16	18	.3125	* F / 17/64	.257 / .2656	21/64	.328
5/16	24	.3125	* I / 9/32	.272 / .2812	21/64	.328
3/8	16	.375	5/16	.3125	25/64	.3906
3/8	24	.375	* Q / 21/64	.332 / .3281	25/64	.3906
7/16	14	.4375	* U / 3/8	.368 / .375	29/64	.4531
7/16	20	.4375	25/64	.3906	29/64	.4531
1/2	13	.5000	27/64	.4218	33/64	.5156
1/2	20	.5000	29/64	.4531	33/64	.5156

x Sizes regularly used in radio work

* Preferred size if available

USE OF MICROMETER

General Information:

The Micrometer caliper is a measuring instrument used to obtain precision dimensions to 1/1000 of an inch. It opens and closes by the turning of the thimble which has an accurately cut interior thread. The Micrometer should be adjusted and used as a precision instrument and not forced as a clamp or vise.

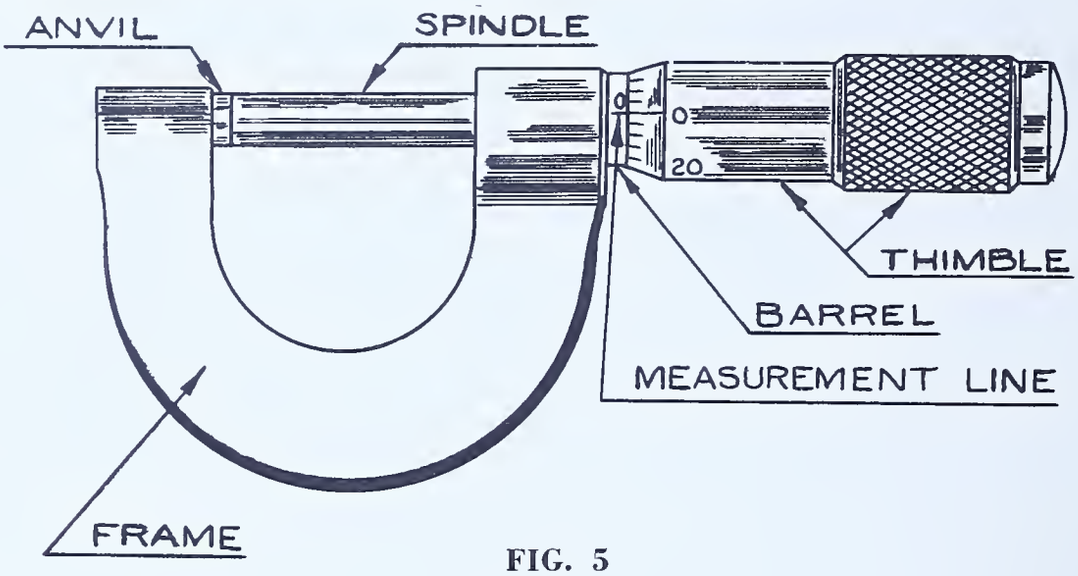

FIG. 5

Reading a Micrometer

1. Turn the knurled thimble until the spindle touches the anvil. Note that the "0" on the thimble is at the measurement line on the barrel. If when the Micrometer is gently closed the zeros do not coincide, consult instructor for adjustment. See Illustration Page 63, Fig. 14, for method of holding the Micrometer.

2. Turn the thimble one complete revolution, to open, (until the "0" mark on the thimble again is even with the measurement line). The turning of the thimble one complete revolution causes the spindle to move a distance of the pitch of the thread.

   Since the pitch of the thread in the Micrometer is 40 per inch, one complete revolution will move the spindle and thimble 1/40th of an inch or .025".

   THE READING OF THE MICROMETER IN FIG. 6. IS .025".

3. Turn the thimble one or more complete revolutions in the same direction. The distance now travelled is that of twice the pitch of the thread. 2 x .025 = .050 (see Fig. 7).

Reading

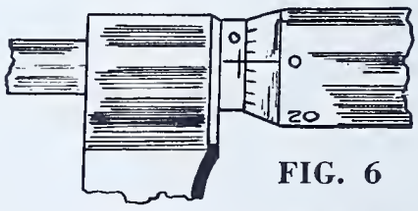

FIG. 6

.025

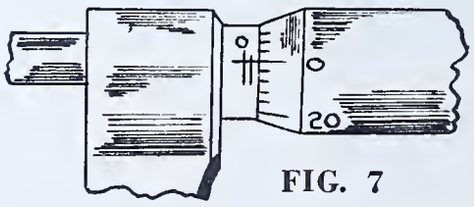

FIG. 7

.050

Readings

4. Turn the thimble two more complete revolutions. The opening now is 4 x .025 or .100". (Fig. 8) Every fourth line represents .100", and these lines are numbered 1, 2, 3, etc., indicating measurements of .100", .200", .300", respectively. These are read as one-hundred thousandths, two hundred thousandths, etc.

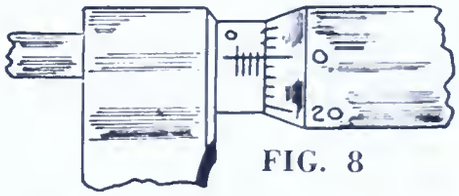

FIG. 8 .100

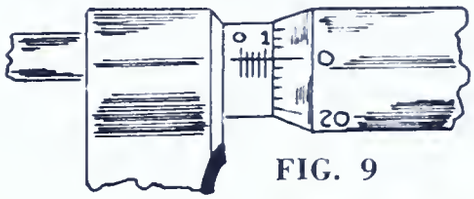

FIG. 9 .125

5. Turn the thimble one more revolution. See Fig. 9. This reading is .125. The next line farther would be .150, then .175, then .200, then .225, etc.

6. Close the Micrometers.

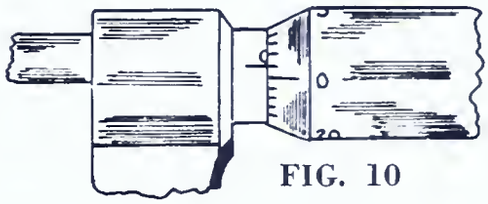

FIG. 10 .001

7. Observe the markings around the thimble.

Note that they divide the circumference into 25 equal parts. Turning the thimble 1/25th of a revolution will move the spindle 1/25th of .025 or .001.

The divisions on the thimble therefore represent .001". The reading in Fig. 10 is .001".

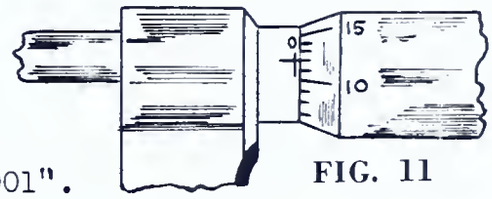

FIG. 11 .012

For convenient reading these divisions are numbered every 5 spaces as 5, 10, 15, 20. When 25 of these graduations have passed the measurement line, another .025 is indicated.

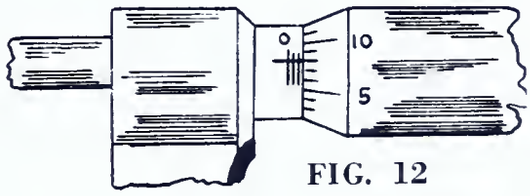

FIG. 12 .058

8. Observe the readings in Figs. 11-13 at right and note how the barrel reading and the thimble reading are added to give the measurement desired.

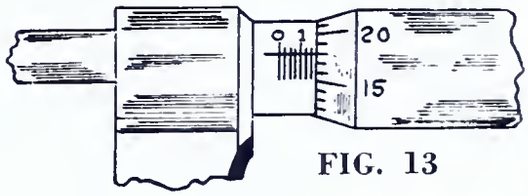

FIG. 13 .168

9. Practice sketches shown on question sheet.

10. Practice use of Micrometer by measuring coins, scrap metal, etc., and compare with classmates' reading of same things.

Caution

Do not tighten Micrometer with heavy pressure.
Read Micrometer while it is on the work.
Open the Micrometer before removing it from the piece marked.

The lines on the barrel represent .025" each; the lines on the thimble .001" each. Their readings are added.

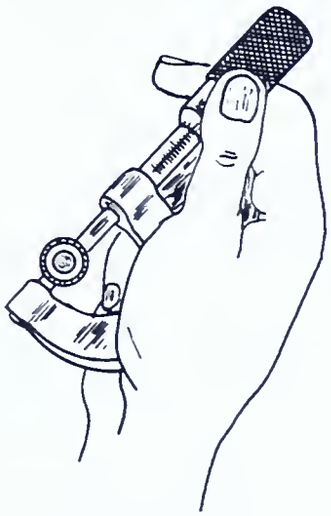
FIG.-14

DRILLS

General Information:

A drill is a cutting tool designed to bore holes in most materials. It is usually made of carbon steel. Where hard grades of steel must be drilled the high speed steel drill is used.

The straight shank twist drill is the one most frequently used in radio work. Twist drills will stay in good working order longer if the proper cutting lubricant is used while drilling; this reduces friction and consequent overheating.

The straight shank twist drill is made from one piece of metal but is designated as having three parts; namely, the shank, the body, and the point. See Fig. 15.

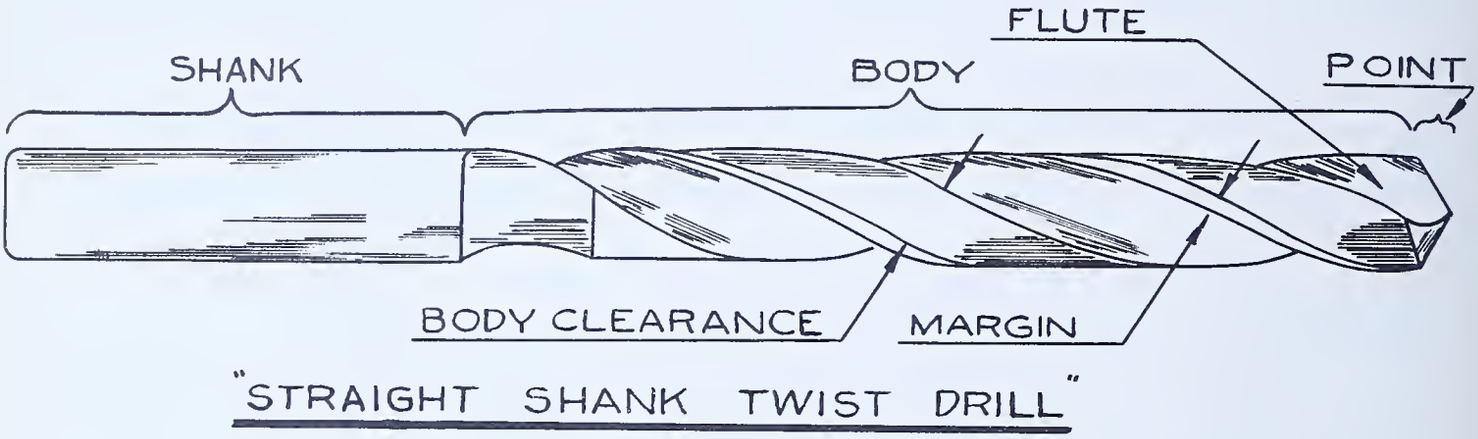

FIG. 15

The shank fits into and is gripped in place by the chuck of the hand or electric drill.

The flutes and body clearance are cut into the body of the drill, leaving the sharp edged margin as the outer diameter of the drill. (See Fig. 15.)

Body Clearance - The undercut portion of the body of the drill between the margin and the flutes is called the body clearance (see Figs. 15-16). The thin portion of the center of the drill which forms the dead center at the end of the drill is called the web (Fig. 16).

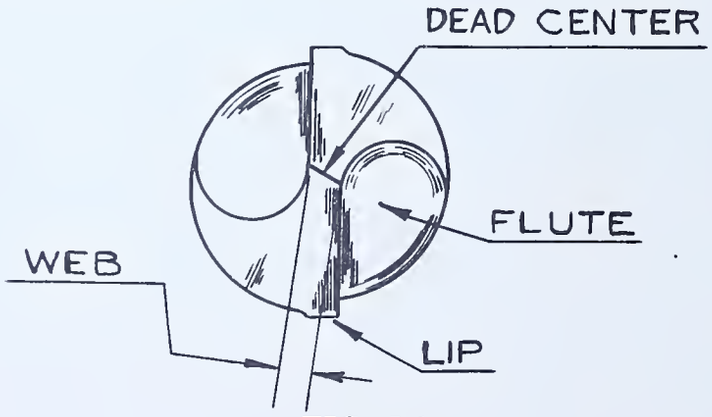

FIG. 16

The point (Fig. 17) forms the cutting end. It is normally ground to an included angle of 118°. The angle varies with the type of material. The harder the material the greater the angle and vice versa. (Fig. 18)

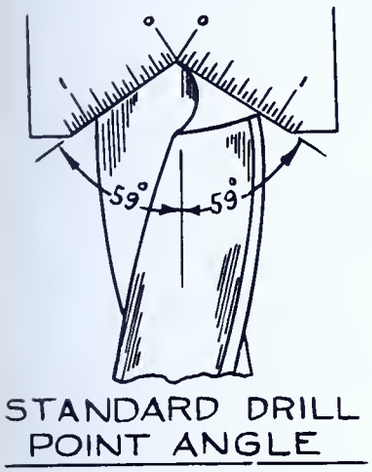

FIG. 17

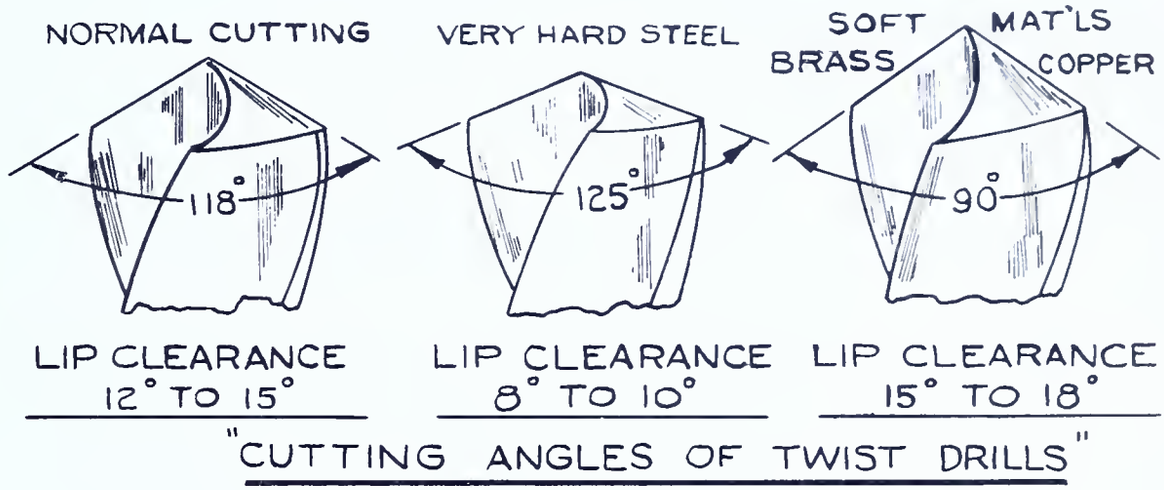

FIG. 18

The lips are the cutting edges. To permit free cutting lip clearance is provided. See Fig. 19. This is usually between 12° and 15°. The harder the material the smaller the clearance and vice versa.

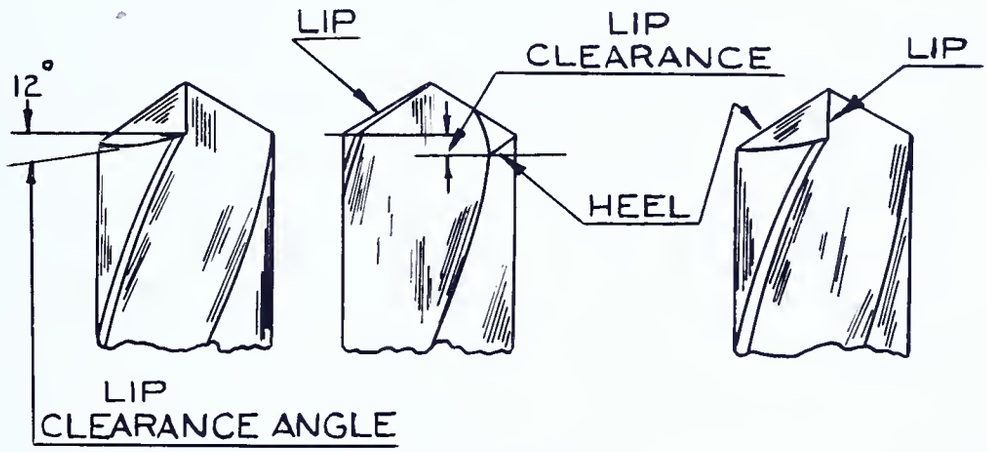

FIG. 19

In grinding the drill to shape, the following precautions are important.

Note: Ask instructor to demonstrate drill grinding operation. The trainee should not attempt to sharpen a drill.

Precautions in sharpening a drill on grinding wheel.

1. Do not shift dead center, shifting causes the drilled hole to be larger than the drill itself.

2. Too much pressure on stone or continued holding against stone causes overheating and loss of the temper. The lip turns blue as it becomes overheated. Dipping into water at short intervals helps keep the drill cool.

3. If overheating has occurred the blue portion must be removed by grinding slowly and a little bit at a time. The drill is sometimes fastened in a vise and the blued tip broken off.

4. Grind both sides of point symmetrically.

5. Be sure to grind clearance properly.

USING THE HAND DRILL

General Information:

The hand drill, the brace, the portable electric drill and the drill press are all used in drilling holes. In maintenance work it is more convenient to use the hand drill than the other types for making small holes.

Tools needed:

Hand drill
Center Punch
Hammer
Vise or clamp
Assorted wooden blocks

Procedure:

1. Ascertain size of hole to be made.

2. Determine from the table of drill sizes the number or size of the drill to be used.

3. Obtain hand drill, center the drill in chuck and tighten. The hand drill is tightened only with the hand.

   Note: In placing drill in chuck it is good practice to insert the drill as far as it can go, (never farther than flutes) and then pull out about 1/8". This allows for the slight lifting effect of tightening the chuck.

4. Check point where hole is to be made for well defined punch mark. If it is missing make one.

5. Place wood block or board behind point where hole is to be drilled.

6. Fasten work in vise, or by clamps to a rigid bench. Sometimes work is held in place by stops.

7. Hold hand drill firmly in left hand and place point of drill in center punch mark. See Fig. 20.

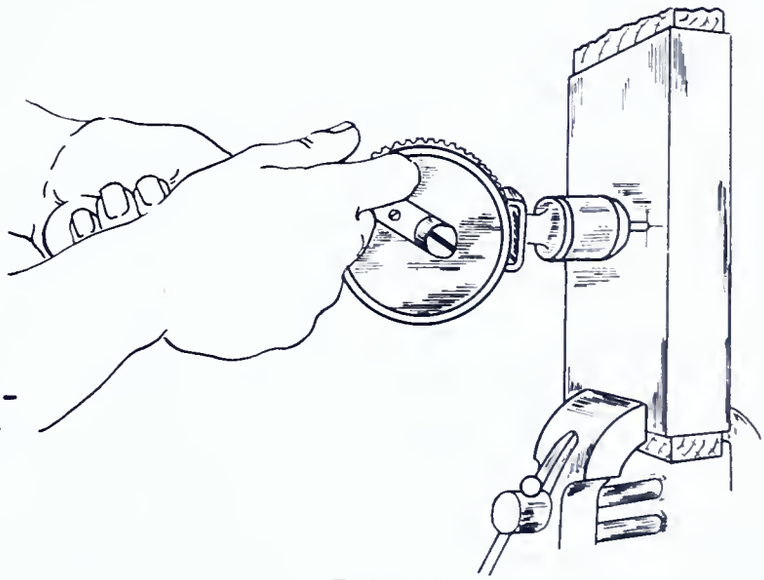

FIG. - 20

8. Line up the drill for direction of the hole.

9. Turn crank handle of drive gear with right hand in a clockwise direction at the same time applying enough pressure on the drill to start cutting action.

   Note: Maintain a uniform rotary motion, avoiding any side motion.

10. Continue turning and applying steady pressure until hole is drilled all the way through.

11. Withdraw hand drill while continuing to turn as if cutting. This helps clear the hole.

12. Remove burr which may have formed on underside by taking a few turns with the tip of a larger drill or a rose reamer.

THE HAND HACK SAW

General Information:

The hand hack saw is used primarily for metal cutting and an understanding of its correct use is necessary for efficient work.

The hand hack saw consists of two parts, the Frame and the Blade.

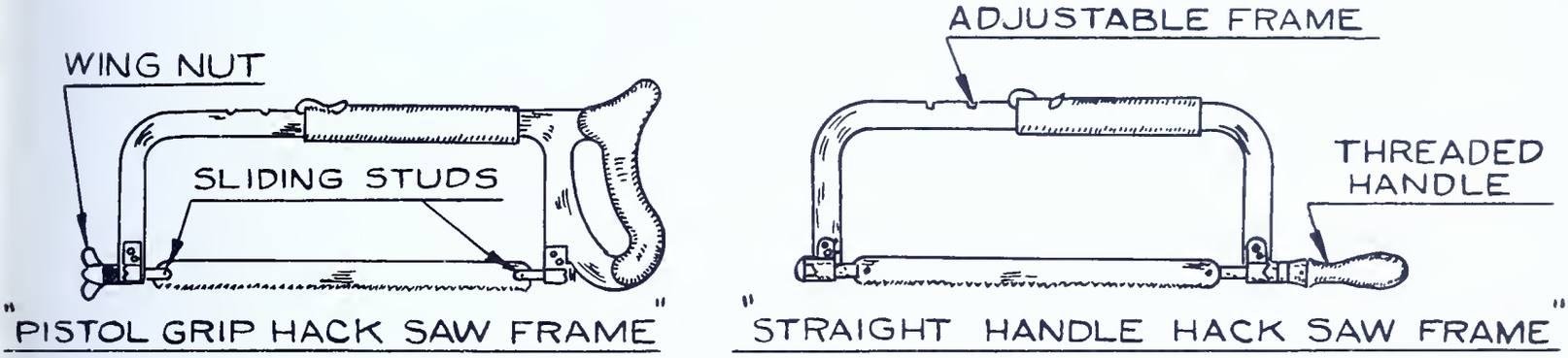

FIG. 21

Frames are of two types - pistol grip and straight handle, Fig. 21. Frames may be adjustable in length to fit the blade.

The frame holds the blade by means of pins on sliding studs in each end of the frame. The sliding studs can be adjusted so that the blade is held in any of four positions 90° apart, which permits frame clearance.

Tension is applied to the blade by turning the threaded handle or wing nut of the straight handle type frame, and by turning the wing nut in the pistol grip frame.

(2) The Blade

Hack saw blades are made of various grades of steel depending upon the job that is to be done. Those that are completely hardened are called the all-hard type; those with only the teeth hardened are called the "flexible" type even though both types are flexible.

The blades are usually from 8" to 12" long between mounting hole centers and from 7/16" to 1/2" in width. All blades are about .025" thick.

In deciding which blade to use in cutting a particular thickness or type of metal the pitch of the teeth (number of teeth per inch) is important. Fig. 22. Blades vary in pitch from 14 to 32. In general the harder or thinner the material the greater should be the number of teeth per inch on the blade used. See Fig. 22.

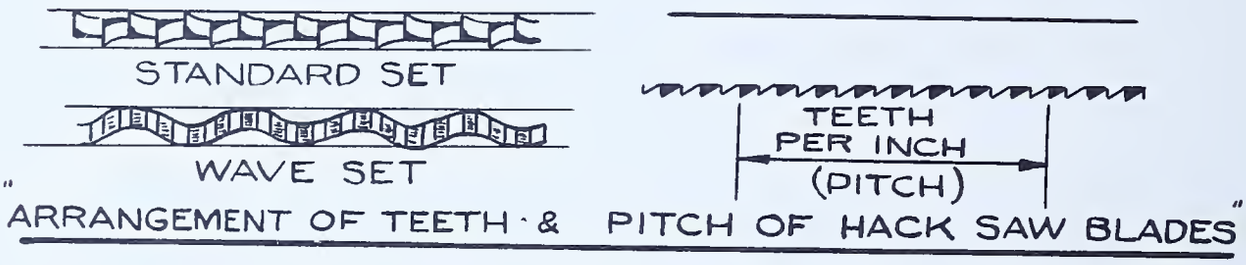

FIG. 22

It is customary to use a blade in which at least two teeth are in contact with the surface being cut. See Fig. 23.

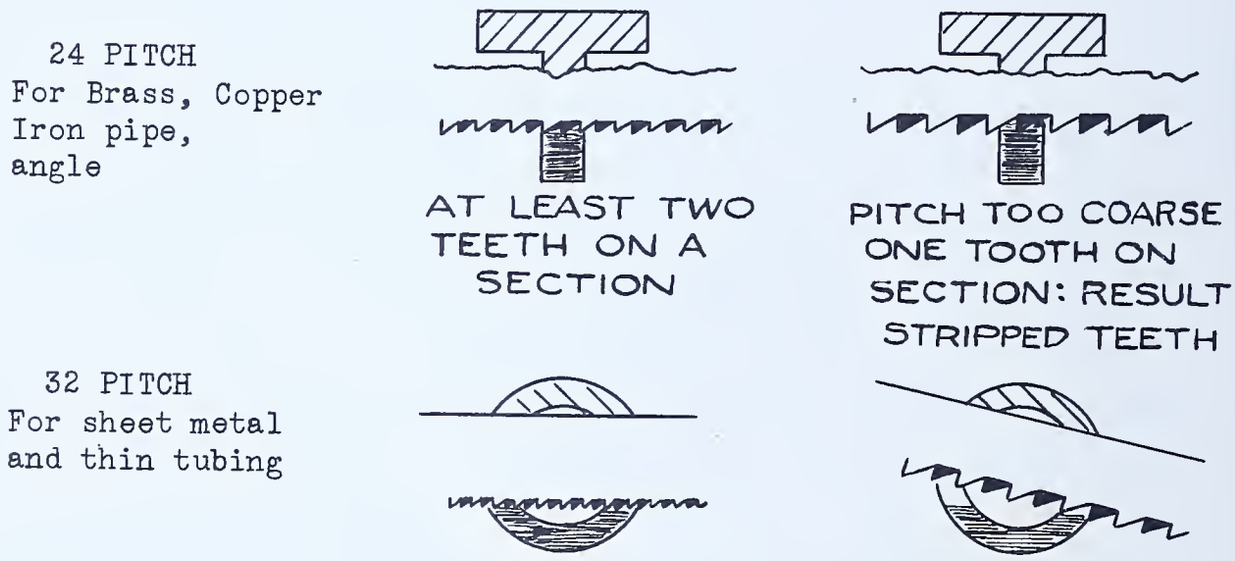

FIG. 23

Cutting speed and pressure:

About 40 to 50 strokes per minute will produce the best result and sufficient pressure should be applied to prevent slipping and sliding.

Too fast a stroke overheats the blade. Slipping and sliding glazes the teeth, dulling the blade.

Procedure:

1. Select saw blade for job at hand.

2. Assemble blade in frame so that teeth point in direction away from handle.

3. Tighten blade well in frame to prevent saw from buckling and drifting.

   Note: Use judgment when tightening the frame to prevent breaking the blade, shearing the pins, or bending the frame. Excess strain will cause the blade to cant.

4. Clamp work in vise in a position to provide as much cutting surface as possible in order to engage the greatest number of teeth.

   Note: The use of soft removable jaws on the vise will prevent marring a finished surface.

   Place work so the saw will cut about 1/4" away from the vise jaws in order to prevent work from springing.

5. Indicate the starting point by nicking the surface with a three-cornered file to break any sharp corner which might tend to strip the teeth. This mark will also aid the beginner to start the saw at the proper place. Usually the left thumb is held on the work against the blade for this purpose during the first few strokes. See Fig. 24.

6. Grasp the handle of the frame securely with the right hand. After starting, the front end of the frame is held by the left hand to help guide the saw and to give added pressure when sawing. (Fig. 25)

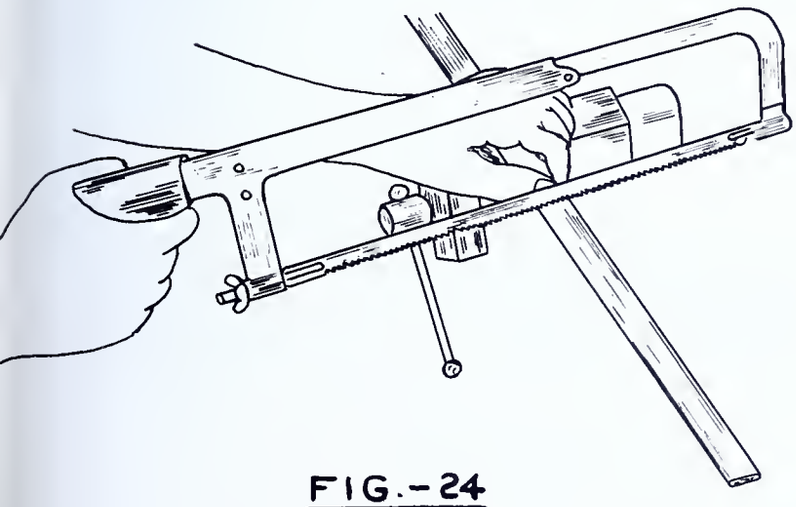

FIG.-24

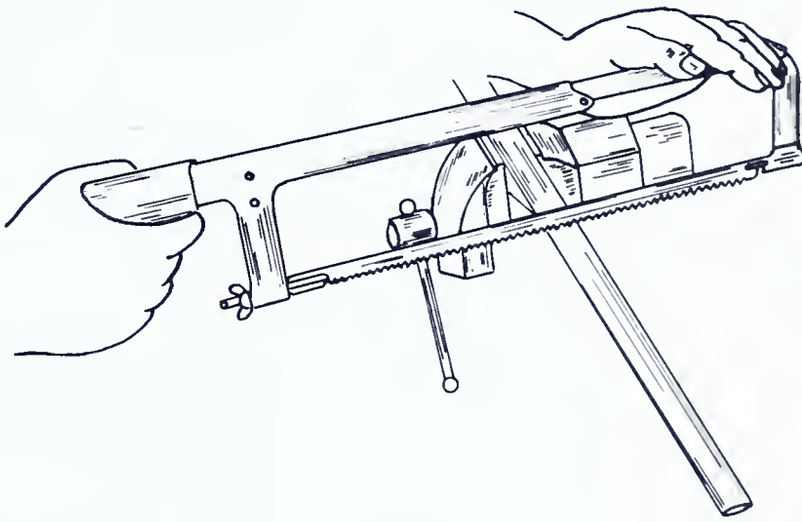

FIG.-25

Note: When sawing to a given line, place the work in the vise so that the line is at right angles to the top of the vise jaws. (Fig. 26)

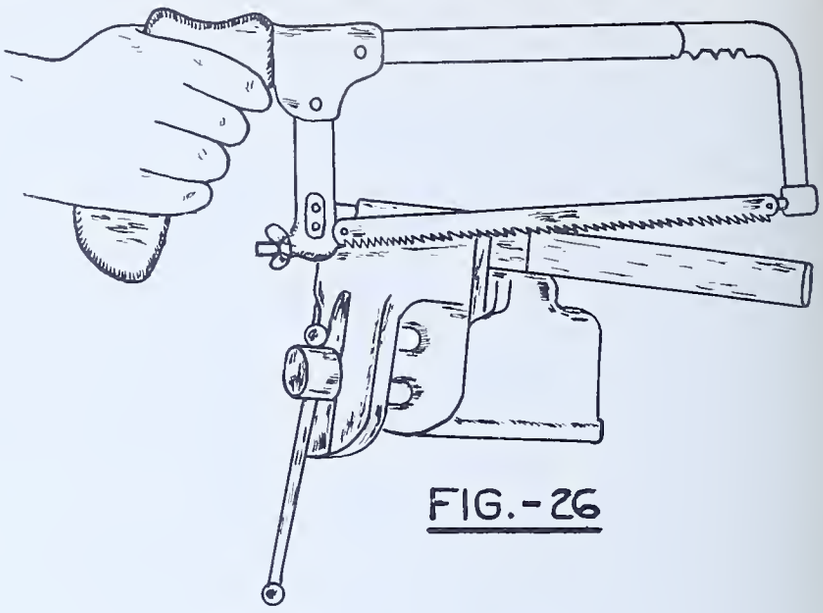

FIG.-26

7. To start the cut, place the front end of the blade on the mark. Tilt the saw with the handle lower than the front of the frame at a very slight angle as in Fig. 27. Apply slight pressure and return saw to starting position.

8. Repeat the process adding a little pressure on the succeeding strokes after the first cut. Continue the process at the rate of 40 to 50 strokes a minute for average work.

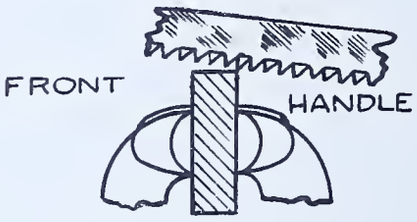

FIG. 27

Note: a. No lubricant is necessary when sawing by hand. However, a little oil applied to the side of the blade will aid in taking a deep cut.

b. Care should be taken to prevent either stripping the teeth or breaking the blade. Some of the causes of breakage are:

(1) Pitch too coarse for material;
(2) Too much pressure applied on the cutting stroke;
(3) Work shifting in vise; and
(4) Attempting to change cut by twisting the saw.

c. When a saw has been broken in an unfinished cut, the cut should be resumed if possible in another place on the work because the "set" of a new saw is thicker than that of a used saw. A new blade will break if forced into the old cut. However, if proper care is taken to prevent "pinching", the previous cut may be enlarged by carefully re-sawing with the new blade.

FILES AND FILING

General Information:

The file is a cutting tool used to shape and fit parts and to prepare and finish surfaces.

The face of the file (Fig. 31) is cut into diagonal rows of teeth. The size of the teeth, their arrangement, the size of the file, and its shape are all factors in determining which file is to be used for a particular job.

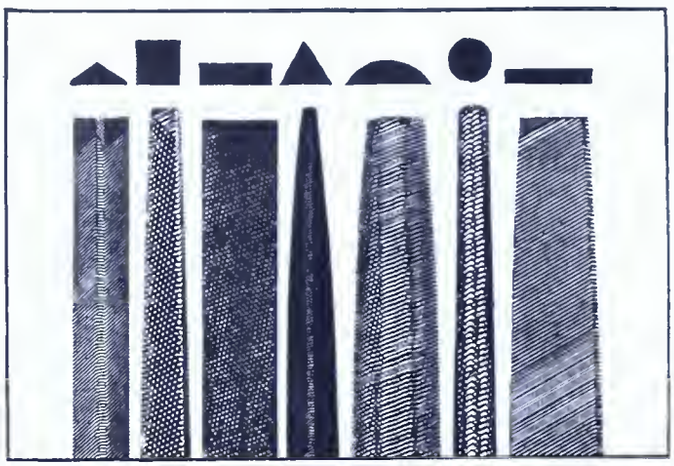

FIG. 28

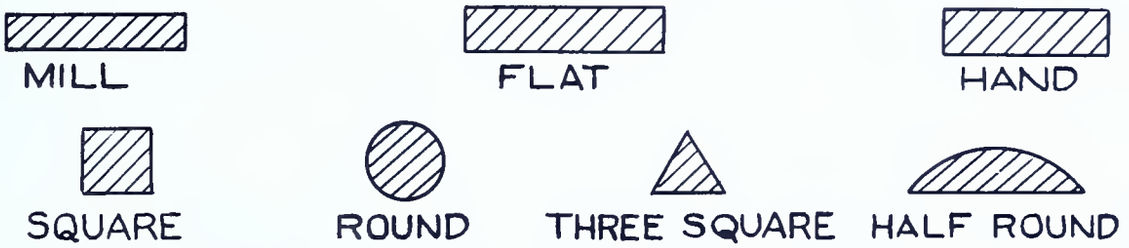

"SHAPES OF MOST COMMONLY USED FILES"

FIG. 29

File cuts, or number and arrangement of teeth, are referred to by name, rough to dead smooth, or by number, #00 (coarsest) to #8 (finest).

Common File Cuts Used:

Bastard Cut — Second Cut — Smooth Cut

FIG. 30

The length of the file is the length of the cutting surface and does not include the handle. The actual metal of the file terminates in the "tang" onto which a wooden handle should be placed.

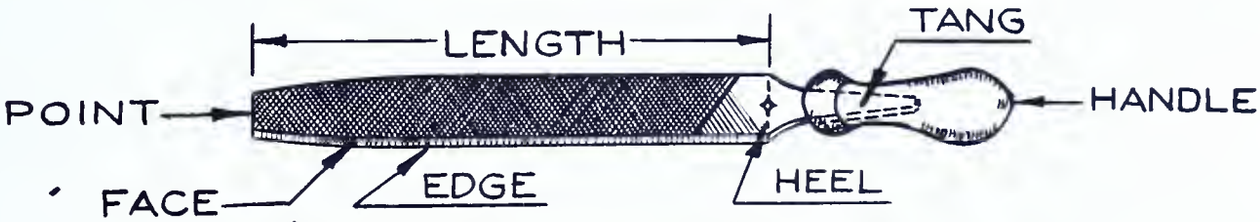

"PARTS OF A FILE"

FIG. 31

Procedure:

1. Select proper file. Use a round file for small round holes, and half round file for larger holes or curved surfaces. A flat file is used for flat surfaces or for rounding corners.

   Where much material must be removed it is best to use a coarser file first and finish the job with a smooth file.

2. Place job in vise. To avoid marring the surface of the material use removable jaws made of some softer material such as brass, copper, wood or leather.

3. Hold file over surface to be filed, in a direction parallel to cut, with right hand on handle and left hand on end of file. See Fig. 32.

4. Begin cutting by taking smooth even cuts with a forward motion of the full length of the file. Enough pressure should be applied to insure a cut being made without slipping or sliding.

   DO NOT ROCK THE FILE WHILE DOING THIS OPERATION

5. If the surface is large, check with a straight edge from time to time, to avoid an uneven surface.

6. Continue filing until practically all the material to be removed has been filed away.

   Note: Hard steel may be finished with a smooth file. Softer material such as copper, requires a coarser file, the smoother file would soon be clogged with copper filings.

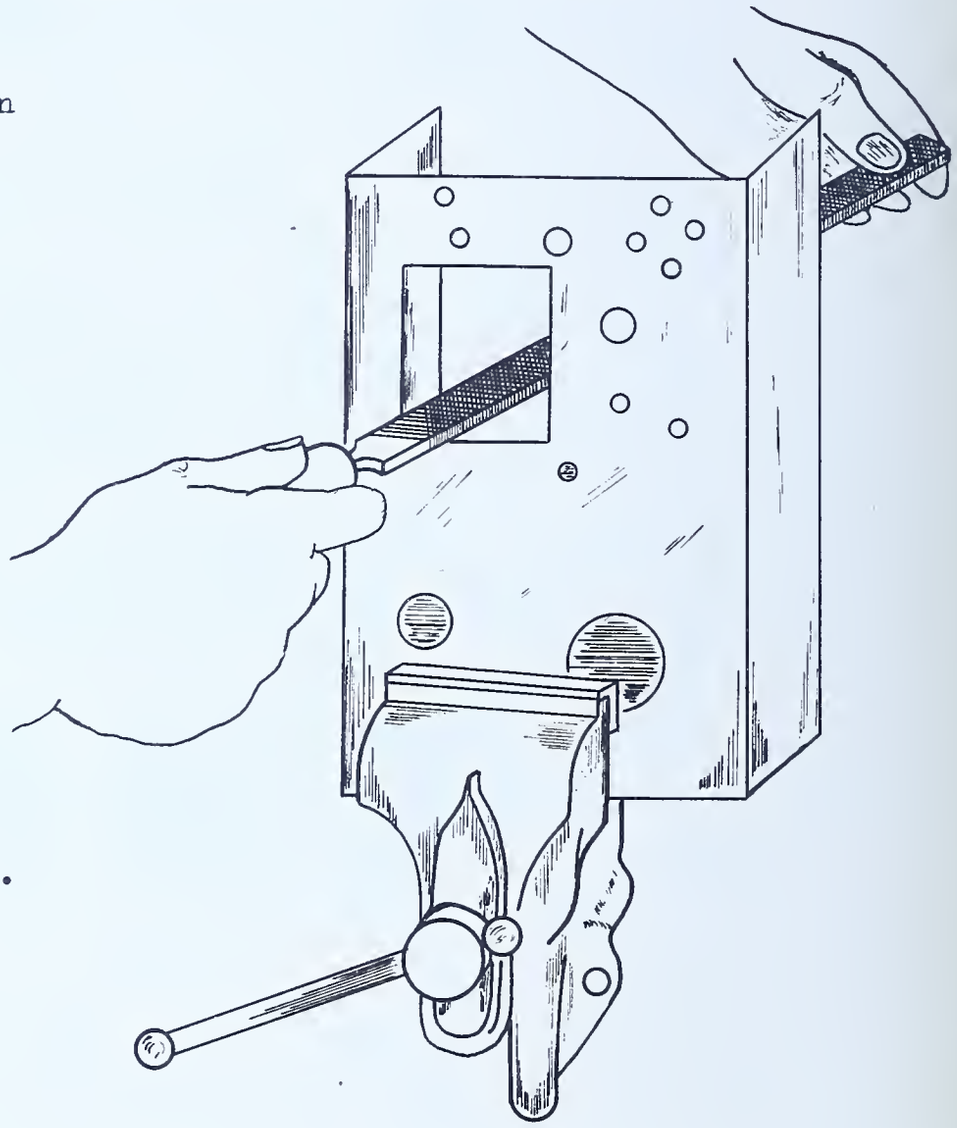

FIG.-32

7. Choose a smoother file and continue filing until work is finished.

   Caution: (a) Remove burrs which may appear.
   (b) Do not file beyond file line.

CLEANING FILE

General Information:

File teeth become clogged with tiny particles during the filing operation. The file loses its cutting efficiency as soon as that happens. Frequent cleaning of the file, particularly when working on soft materials such as brass, copper, and bakelite, is necessary.

The common devices used are: (a) the file card and scorer, (b) brass or copper strip, (c) chalk.

A file card is a one or two sided brush. In the two sided type one side is usually wire and the other side is fibre. See Fig. 33.

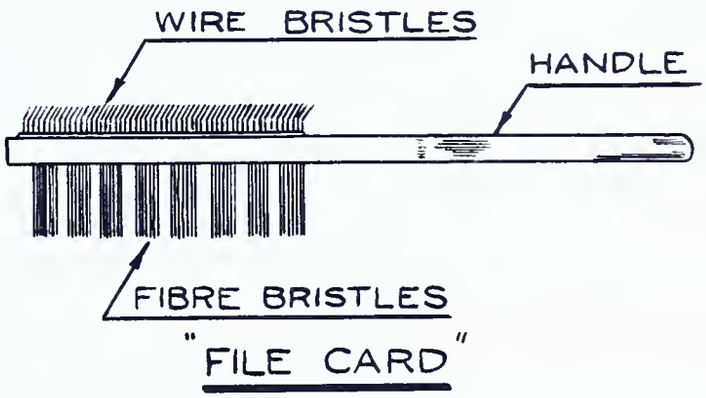

Procedure:

1. Brush loose particles of metal from file with wire file card; brushing motion is parallel to the teeth on the face of the file.

2. Use wire scorer, or brass or copper strip to scrape or push out pieces wedged into spaces between teeth. Scraping motion is in a direction parallel to the teeth.

3. Chalk is rubbed into the face of the file whenever a smooth file is used to help prevent clogging of the teeth with very fine particles of material.

   Caution: (1) Clean files frequently. This increases their period of usefulness.

   (2) Do not strike files against each other or against another object to dislodge particles because teeth of file or object struck is damaged.

HOW TO USE THE TAP

General Information:

Tapping can be done only when the metal is thick enough to take at least two full threads. This is determined by measuring the thickness of the metal with a micrometer. For example a 32 thread (32 per inch) is 1/32" pitch. The metal to receive a #32 thread, therefore, should be at least 1/16" thick (2 x 1/32").

If the metal is not thick enough the screw specification must be changed to provide a pitch which will allow two full threads. If this cannot be done some other fastening method such as nut on screw must be used.

If the metal in the above problem were less than 1/16" thick (.0625"), say 3/64" (.046875") thick, the 32 thread could not be used. The thread selected would probably be a 44 thread, .0227" pitch, which would satisfy the requirement, 2 x .0227" = .0454", therefore less than the metal thickness.

It will be necessary to use some cutting lubricant in tapping heavy or hard materials. For ordinary tapping in radio assembly and repair this should not be necessary. Use lard oil or turpentine, not lubricating oil.

After the proper size hole has been drilled into the metal to be tapped, the process of cutting threads into the side of that hole is as follows:

Procedure:

1. Select the tap size in accordance with the screw to be used.

2. Fit the tap securely into the tap wrench.

3. Hold wrench in palm of hand, with fingers gripping the sides of the wrench.

4. Place point of tap into the drilled hole. See Fig. 34.

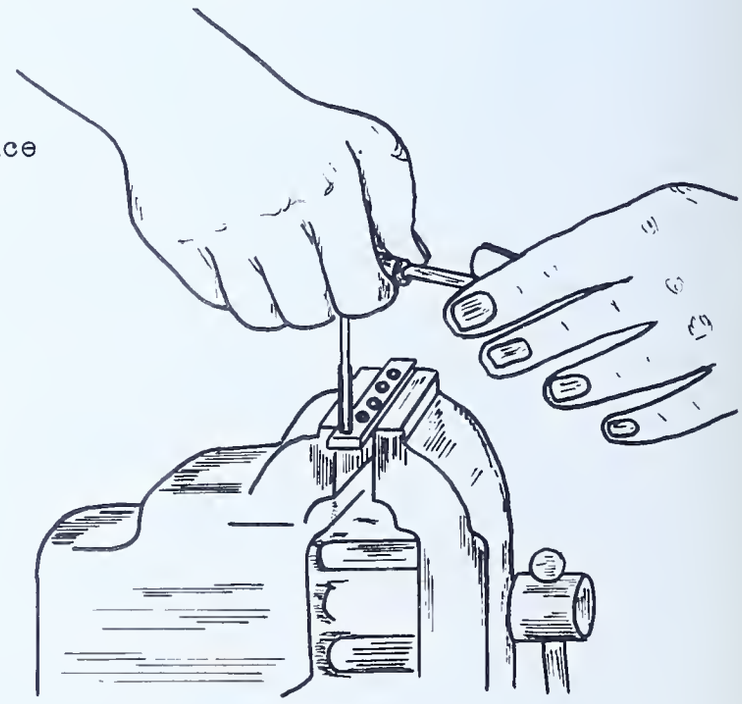

FIG.-34

5. Hold wrench so that the line of the center of the tap is on the same axis as the center of the hole. Be sure to maintain this line during the entire process. The tap is highly tempered and very brittle; forceful sideways motion will break it.

6. Turn tap in a clockwise direction, at the same time pushing firmly toward the hole. This should start a thread.

7. Continue turning and pushing for several turns. Every few turns stop and turn tap about half a turn in reverse to prevent binding and breaking of tap. This clears the hole.

8. Check alignment of tap to be sure it is at the same angle into metal as the drilled hole is (step 5).

   Caution: Do not attempt, when the tap is not being turned, to re-align a tap which has run off the line. Make such adjustment very slightly while turning the tap, or remove and begin again entirely.

9. Continue turning and pushing, stopping every few turns to clear tap as before (step 7).

10. Lighten pressure as tap nears other side of metal, simply turning should cut the few remaining threads.

11. Clean edges of tapped hole by lightly filing any projecting wire edges.

MAKE A DRILL AND TAP GAUGE

General Information:

The usefulness of a drill gauge warrants possession by each worker in this field. This job should be carefully laid out and performed.

Specifications:

Construct a drill gauge according to sketch. Fig. 35.
1/8 M.W. steel strip $1\frac{1}{2}$" wide.

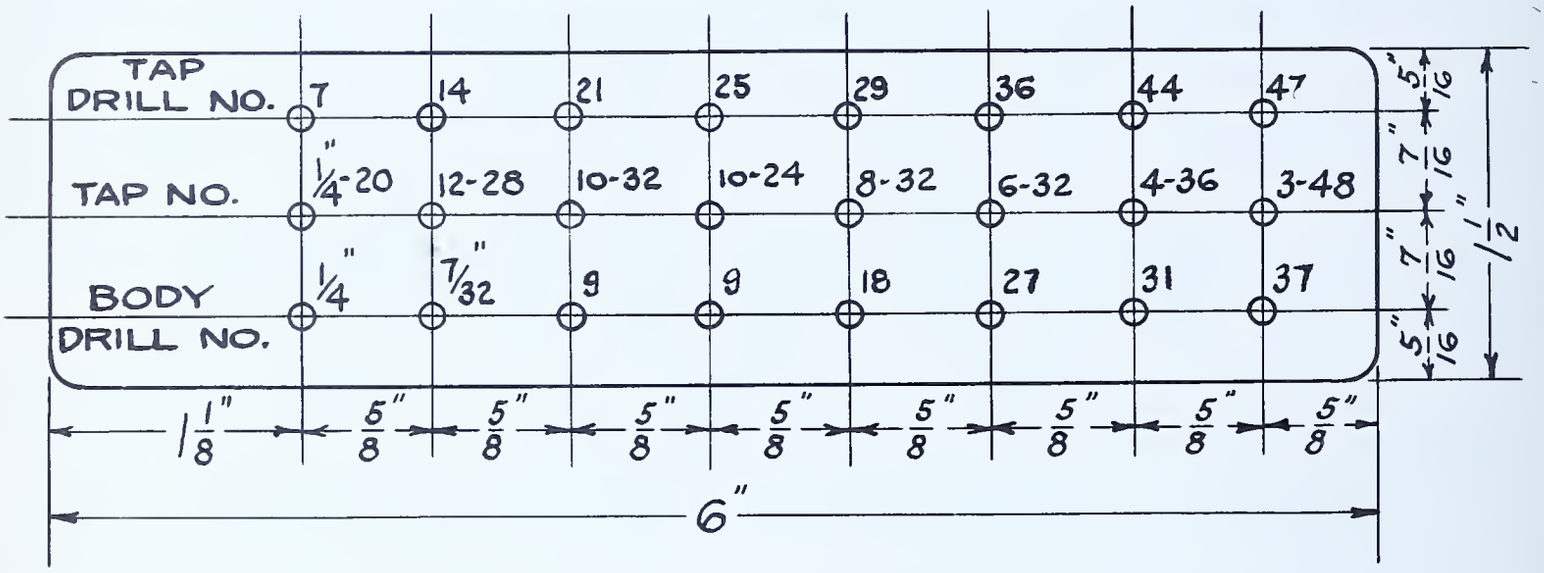

FIG. 35

Tools needed:

1. Combination Square
2. Scriber
3. Hack Saw
4. Hammer
5. Center Punch
6. Medium Cut Flat file
7. Hand or electric drill
8. Set of 1/8" metal stamps
9. Tap wrench

Equipment needed:

1. Vise
2. Shop table
3. Set of numbered drills for holes as above.
4. Set of taps as required for above job.

Materials:

1/8 M.W. strip $1\frac{1}{2}$" x 6" finish

Procedure:

A. Cutting Stock To Size:

1. Secure from stock a strip 1/8" x $1\frac{1}{2}$" x shop length, and place on edge in vise, with about seven inches projecting clear of vise.

2. Hack-saw to rough length, approximately $6\frac{1}{2}$", (assuming first end is reasonably square).

3. Scribe a square line on the face across one end, as close as possible to that end. See Fig. 36.

4. Place piece vertically in vise with top projecting about $\frac{1}{2}$" above jaws, and one side just clear of vise to permit placing of square.

5. File to the scribed line, checking with square. When finished remove from vise.

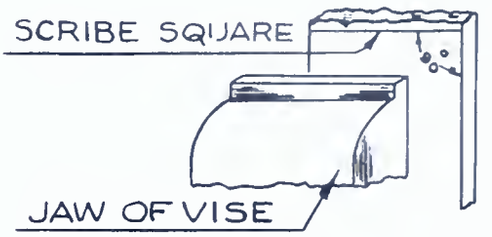

FIG. 36

6. Measure 6" from this finished end and scribe a mark with square across the face of piece.

7. Place piece in vise, with 6" edge up.

8. Hack-saw to working length - about 1/16" beyond the scribe line.

9. Place piece vertically in vise and file to finish dimension. See step 5. Check with square.

B. Layout for holes

10. Establish and scribe the center lines as required. See sketch. These must be accurately laid out.

11. Center punch the intersections of center lines.

C. Drill Holes

12. Drill the holes specified. Be sure that proper size drill is selected for each hole.

Note: The respective holes of Row 1 (Tap Drill Number) and Row 2 (Tap Number) will be made with the same drill. For example the first hole in row one and in row two will each be drilled with drill #7.

13. Remove burrs. Turn piece over and lightly file on reverse side.

14. Tap holes as specified, along center row. (Work from face side.)

15. Remove burrs on reverse side by filing lightly.

16. Round corners slightly as in sketch. Use file.

17. Stamp piece with proper markings.

18. Polish if desired, using steel wool and oil.

QUESTIONS

Place the answers to these questions in your notebook or on form as directed by instructor.

1. What type of drill is used most frequently in radio work?
2. How can overheating and rapid dulling of the drill point be reduced?
3. What are the three methods of indicating drill sizes?
4. Where is the size of the drill marked?
5. If not marked how is the drill size measured?
6. What is the function of the flutes?
7. Where is the cutting diameter of a drill measured?
8. What is the normal included angle to which a drill point is ground?
9. When is another angle of drill point used?
10. Why is lip clearance provided?
11. Why is shifting of dead center to be avoided when sharpening the drill?
12. How is the burned portion of a drill removed?
13. How is a hand drill chuck tightened?
14. How is the hole marked for drilling?
15. Why and how is a wood block used in drilling sheet metal?
16. What determines the angle at which the drill is held?
17. How is the job fastened before drilling?
18. Describe two ways of removing burrs from drilled holes?
19. What is done to clean the hole after it is drilled through the work?
20. How can you check the size of a drill if the marking has been removed?
21. What name is given to that drill which makes a hole as large as the outside diameter of a given screw?
22. What is a tap drill?
23. How are taps numbered? What do the numbers refer to?
24. What is meant by "tapping" a hole?

25. What type tap is used mostly in radio work?

26. What is the relationship of the screw and the size of the hole drilled for tapping?

27. What else is the diameter of this hole called?

28. What is meant by the minor diameter of a screw?

29. What is meant by the major diameter of a screw?

30. If the tap gets slightly out of direction how should it be re-aligned?

31. Where can information be obtained concerning the size of clearance and body drills used on the different screw sizes?

32. What should be the reading of a micrometer when it is closed?

33. What is necessary if this reading is not showing when the micrometer is closed?

34. Which two readings are combined on a micrometer to get the total dimension?

35. What do the divisions on the barrel each signify?

36. What is the value of the numbered divisions on the barrel?

37. What considerations are important in choosing the hack saw blade for a particular job?

38. What is the normal stroke speed for average work with the hack saw?

39. What is meant by the "tension" of a hack saw blade?

40. Name three causes of tooth breakage in a hack saw blade.

41. What procedure is necessary to finish a cut after the blade has broken?

42. Name four common file shapes.

43. What type file should be used to take a finish cut on a flat steel surface? On copper?

44. When filing a large flat surface how is it checked to assure flatness?

45. What precautions must be taken when clamping work in a vise for filing?

46. What shape file is used in removing the burr on a large round hole?

47. Why is it necessary to clean a file?

48. Name two devices used to clean files.

49. How are wedged particles removed from file face?

50. How thick must the metal be to allow for tapping?

51. What method of fastening may be used if the metal is not thick enough to be tapped?

52. In which direction is a tap turned during the tapping operation?

53. What cutting lubricant may be used in tapping?

54. Why is a handle on a file important?

Copy the following table in your notebook and fill in the missing information.

Screw Size	Size of Tap Drill	Size of Clearance Drill	Tap Size
3-48			
4-36			
$\frac{1}{4}$"-20			
5/16-18			
10-32			
6-32			
8-32			
12-38			
10-24			
5-40			

DO NOT WRITE IN THIS CHART

COPY FORM IN NOTEBOOK

55. Micrometer Readings

In your notebook write the proper answers for each micrometer as numbered 1-10 below.

①

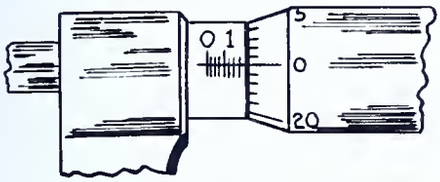

②

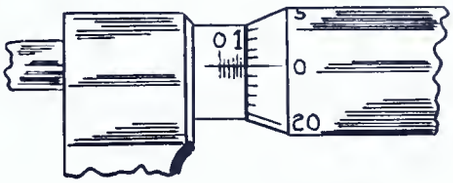

③

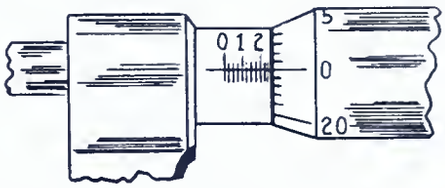

④

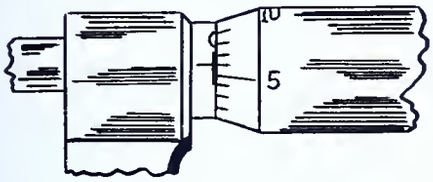

⑤

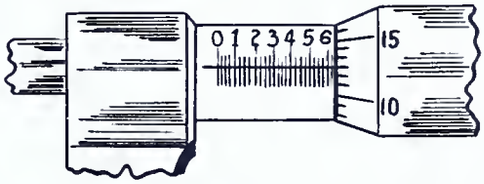

⑥

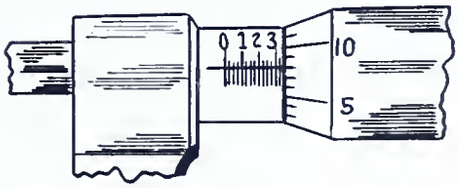

⑦

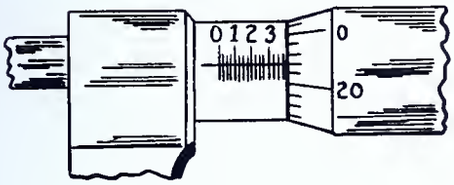

⑧

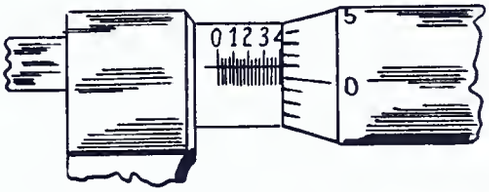

⑨

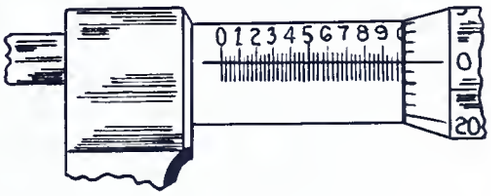

⑩

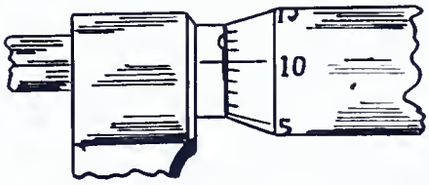

JOB 5

CHASSIS FABRICATION

The fabrication of a chassis provides experience in lay-out for set parts as well as further training in the use of metal working tools. This chassis will be used in several subsequent jobs and should be made with care and precision.

CHASSIS FABRICATION

General Information:

The chassis of a radio set is a base usually made of sheet metal which has been properly shaped, cut, drilled and tapped for mounting component parts on it. This material is usually cadmium plated iron alloy, sheet metal or galvanized sheet iron.

Tube sockets usually project through holes in the chassis so that the tubes are above the base, and the wiring, connections, resistors and small condensers are on the underside.

Specifications:

The size of the socket holes in the top of chassis must be obtained by measuring the sockets available. Other hole sizes should be checked with the parts to be used in the subsequent jobs.

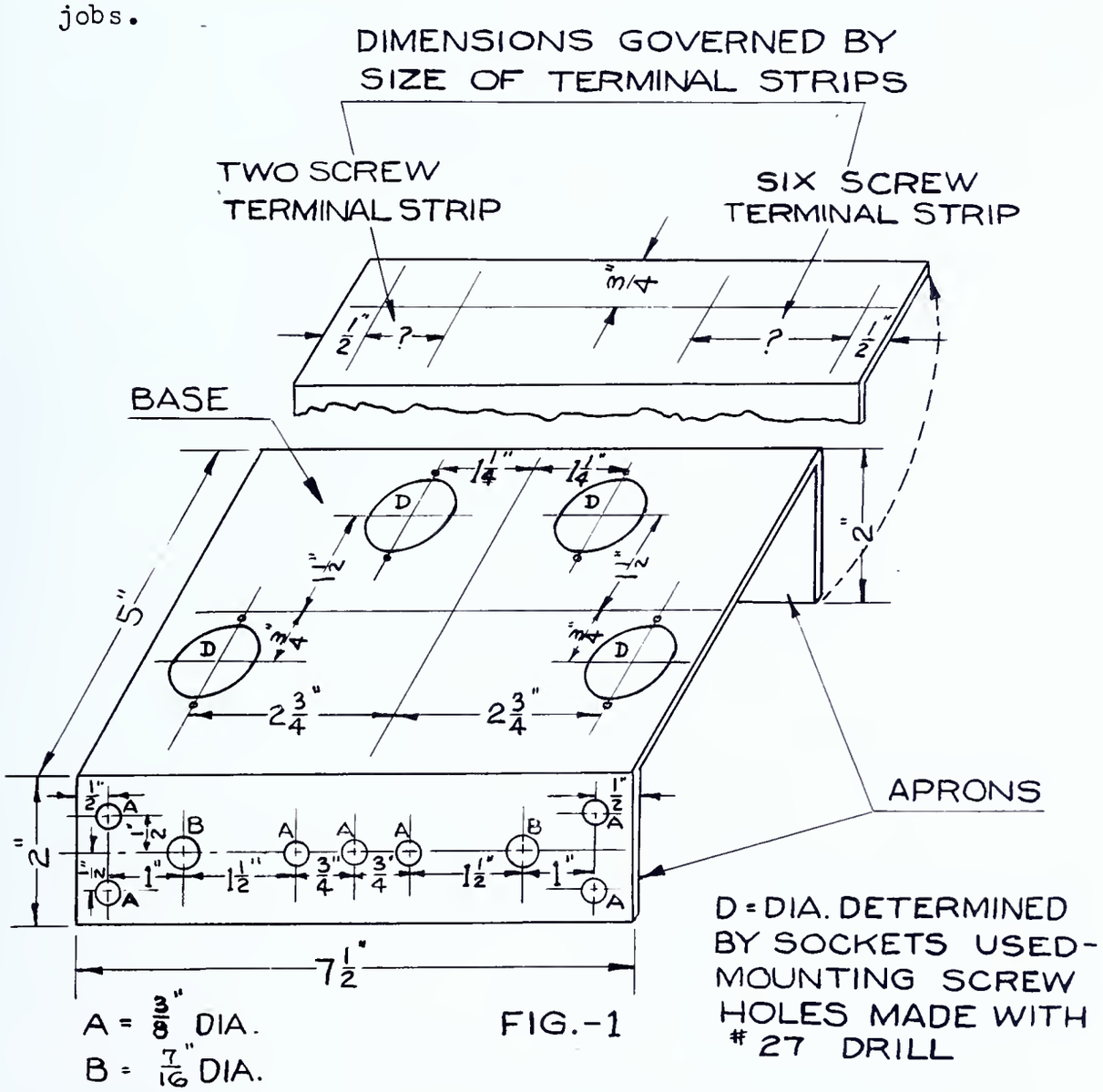

FIG.-1

Specifications (continued):

1. Metal: 22 gauge (.031) galvanized sheet iron.
2. Overall dimensions: $7\frac{1}{2}$" x 9".
3. Detail dimensions: See Fig. 1.
4. File all sharp edges.
5. Aprons to be bent at right angles to top of chassis.

Tools needed:

1. Steel scale
2. Scribe
3. Dividers
4. Combination square
5. Center punch
6. 4 oz. ball peen hammer
7. 8 oz. ball peen hammer
8. Set of drills
9. Drill gauge
10. Straight snips (4")
11. Drill stock or portable electric drill
12. Half-round file, second cut
13. Rat tail file
14. 12" flat file, second cut
15. Socket punches
16. Adjustable end wrench
17. Vise
18. 1/2" cold chisel
19. Mallet

Materials needed:

1. One piece of 22 gauge galvanized sheet iron, $7\frac{1}{2}$" x 9"
2. Parts for mounting

   1 typical socket
   1 2-screw terminal strip
   1 6-screw terminal strip

3. Wooden blocks
4. Metal block

A. LAYOUT OF CHASSIS:

1. Secure material from stock room.

2. Lay out and scribe overall dimensions, $7\frac{1}{2}$" x 9", on material with rule and square.

3. Shear to these lines with tin snips or with foot shears, if available.

   a. Grasp snips in right hand and narrowest part of sheet in left hand as shown in Fig. 2.

      Note: Rest snips and sheet on bench if necessary.

   b. Open blades of snips as far as conveniently possible and insert sheet to be cut in jaws.

      Note: The snips should always be held at right angles to the surface of the sheet to be cut. See Fig. 2.

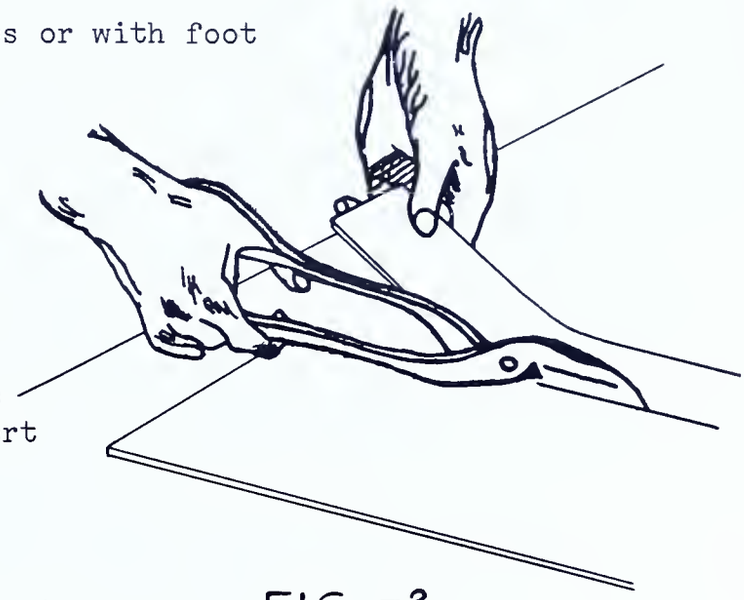

FIG.-2

   c. Cut sheet by closing blades just short of full length. (This prevents jagged edges.)

      Note: Length of each cut will be determined somewhat by the gauge of the metal.

   d. Finish the cut, keeping the snips on the line by changing direction if necessary.

4. File off any jagged edges or slivers which might remain after shearing.

5. Scribe brake lines for aprons parallel to edges as shown in Fig. 3.

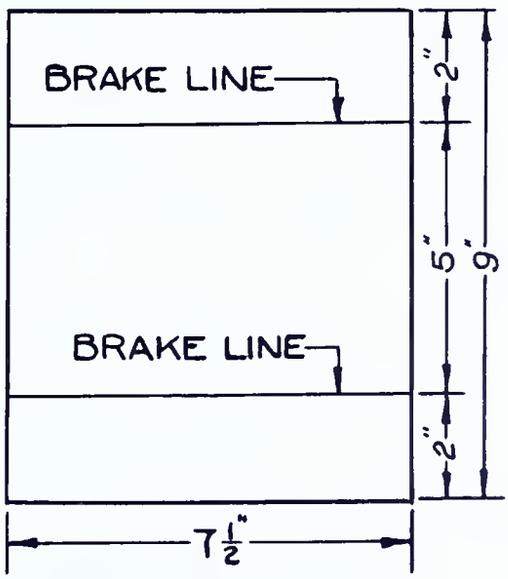

FIG.-3

6. Form the aprons with block and mallet as shown in Fig. 4.

   a. Hold the edge of the metal over the wooden block with the left hand so that one of the brake lines is directly over the right hand edge of the block. See Fig. 4.

      Note: The block must be smaller than the width of the channel in the chassis.

   b. Hold the metal firmly on the block with the left hand and bend the extended edge with a mallet. See Fig. 4.

      Note: A mallet is used because it covers a larger surface and will not stretch the material.

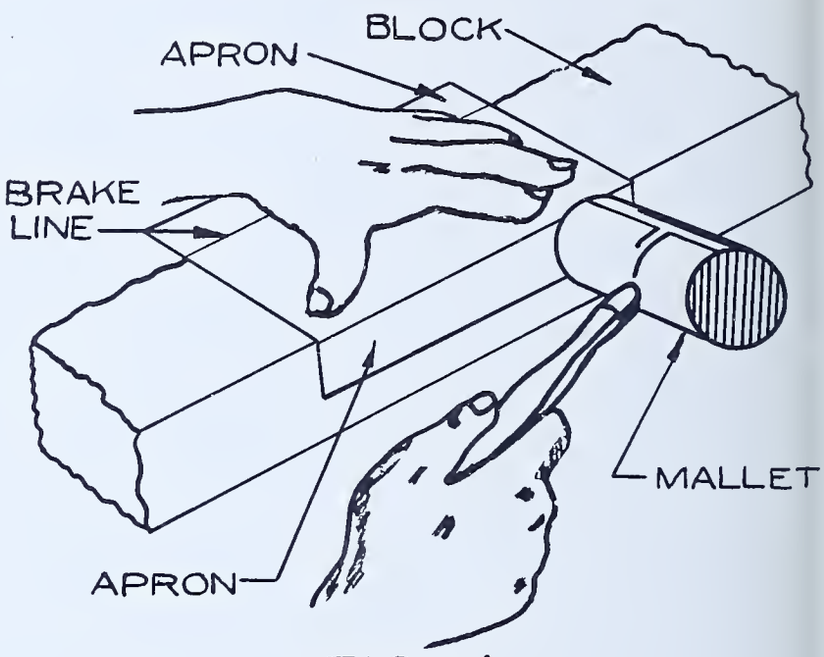

FIG.-4

   c. Continue to bend the metal until the apron is at right angles to the top of the chassis. This should provide a sharp square corner.

   d. Repeat procedure for bending other apron.

7. Establish and scribe the center lines (see Fig. 5) on the chassis (across length and width) with a scribe and straight edge. Hold the scribe like a pencil and apply sufficient pressure to make the line visible. Do not go over a scribed line as this usually results in a double line and inaccuracy.

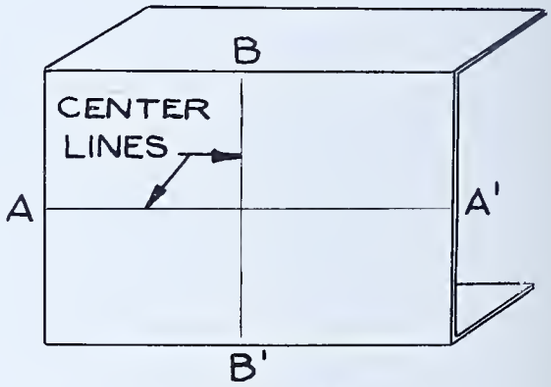

FIG.-5

   Note: Center lines are used as the primary reference in locating all other points on chassis.

It is preferable where one brake edge is at right angle to a side, to draw the center lines AA' and BB' with a combination square in order to insure that BB' is perpendicular to the front apron and AA' is at right angles to BB'.

This is done as follows:

(1) Place scale of combination square flat on surface to be scribed.
(2) Hold head of combination square firmly against the edge to which the perpendicular line is to be drawn.
(3) Place scribe on mark indicating position of line to be scribed.
(4) Move square up to the scribe until it makes contact, but do not disturb scriber.
(5) Draw line with scriber.

8. Locate position of principal parts to be mounted on chassis. Sketch the general outline on chassis with a pencil, and then scribe the secondary center lines which are used to locate part and mounting holes to be drilled.

Note: An experienced worker marks directly on the chassis; the trainee should first use a piece of paper the size of the chassis. The approximate position of all parts is usually provided by the designer, but the exact location of each part is a matter of individual arrangement. The size of parts available may cause a variation in their location; however, the relative position of the parts will remain the same.

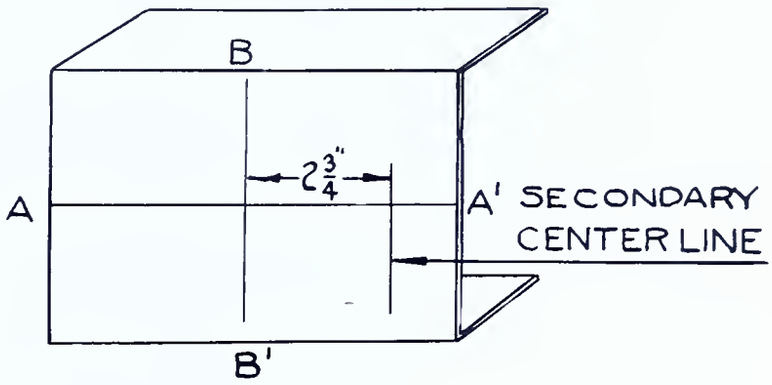

FIG. - 6

a. Measure 2 3/4" from the center line B-B' along the center line A-A' as shown in Fig. 6.

Note: This may be done with dividers and steel scale, setting the dividers to the specified distance on the scale (See Fig. 7) and transferring the distance to the chassis. It may be done by measuring the distance directly on the chassis with a steel scale and marking the distance with a scribe.

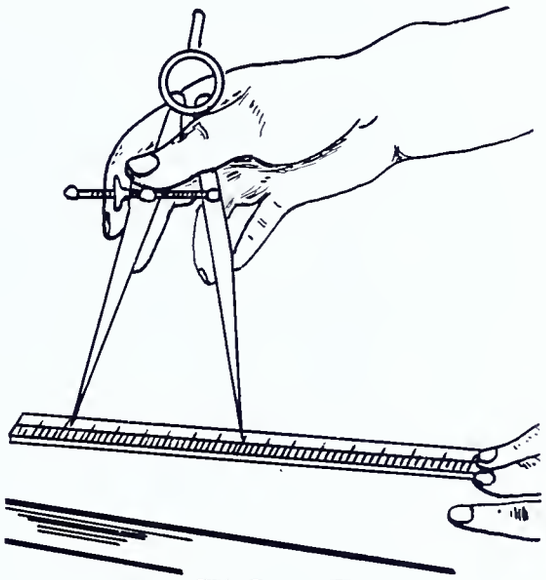

FIG. - 7

b. Mark secondary center line with scribe and straight edge, applying sufficient pressure on scribe to make the line visible. See Fig. 6.

c. Locate center of part by measuring 3/4" from center line A-A' along the newly scribed secondary center line and scribe another secondary center line intersecting it at right angles as shown in Fig. 8.

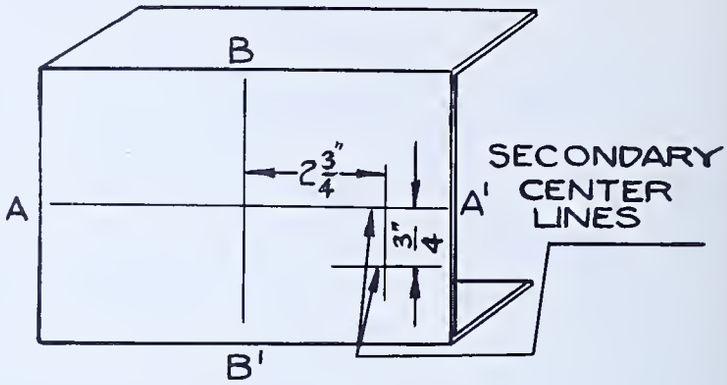

FIG.- 8

d. Measure distance between part mounting holes with steel scale.

Note: When the mounting holes are inaccessible with a steel scale, they are measured with dividers as shown in Fig. 9.

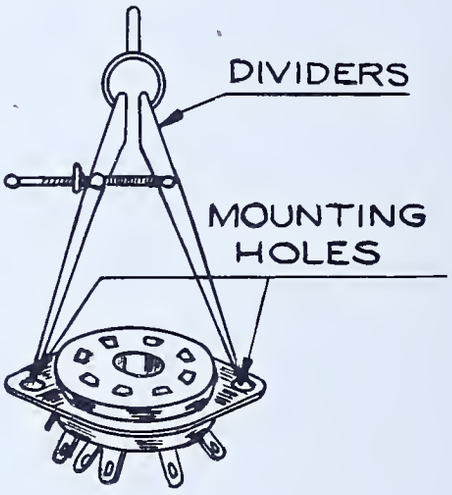

FIG.- 9

e. Lay out and scribe one-half this distance on each side of center-line. See Fig. 10.

f. Identify points to be drilled by encircling with a pencil.

g. Mark size of hole if it is to be tapped. Simply mark size of screw; for example, 8-32.

h. Locate and scribe the remaining center lines for each part of the base and aprons of the chassis as shown in specifications.

i. Check layout against specifications

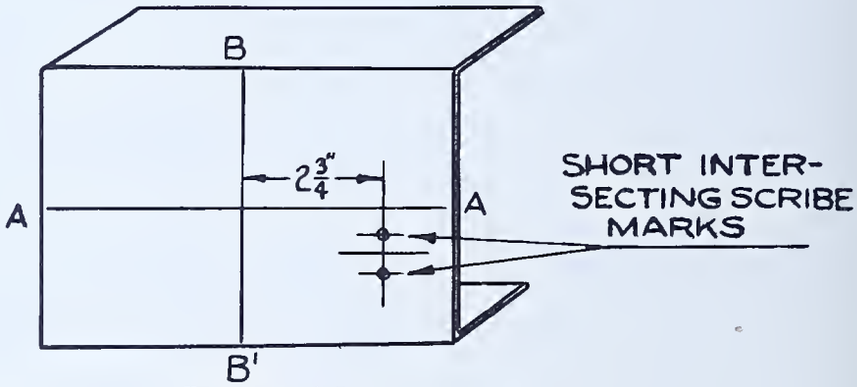

FIG.-10

9. Center punch all holes to be drilled.

Note: Place wood or metal blocks behind points to be center punched. This prevents bending the chassis.

10. Proceed to make all specified holes in the chassis.

B. PROVIDING HOLES IN CHASSIS

1. Provide small holes

   a. Drilling and tapping

      (1) Select drill according to chart and drill all holes.

      Note: Drill all holes, beginning with the smallest. In general practice the centers of larger holes are first drilled with a smaller size drill to provide more accurate centering of the larger drills.

      (2) Remove any burrs, using the tip of a large size drill where the holes are too small for a file.

      Note: After a hole has been drilled, a burr is generally left on the underside of the chassis. This may prevent proper mounting of parts if not removed.

2. Provide larger holes

   Note: There are three common methods of making large holes in a chassis; namely, socket punch, circle cutter, and cold chisel.

   a. Socket punching

   Note: When holes larger than one-half inch in diameter are necessary in a chassis, a socket punch (also called a shear punch) may be used. A socket punch generally consists of three parts; namely, cutter, die, and bolt (see Fig. 11).

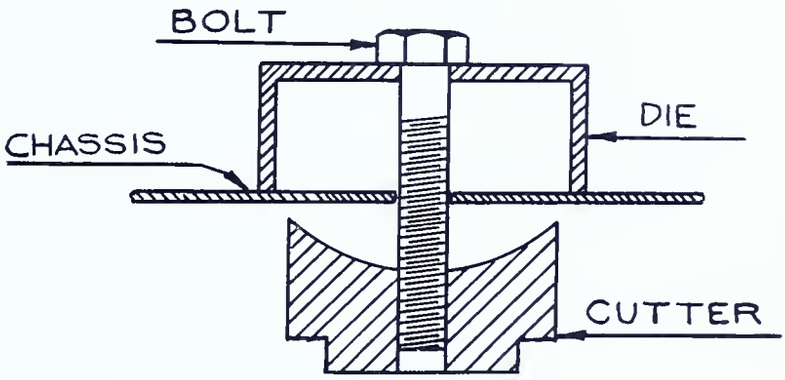

FIG.-11

The cutter has two cutting edges, located symmetrically for balance, and is threaded to receive the bolt. Cutting pressure is obtained by screwing down the bolt, the die giving the cutting pressure. In order to cut a hole in a chassis a pilot hole must be drilled in the chassis to receive the bolt. Sizes of socket punches are generally indicated on the die. The size given is the diameter of the hole which the die will make.

(1) Select socket punch for required hole.

(2) Drill proper size pilot hole in chassis for socket punch bolt.

(3) Disassemble socket punch.

(4) Secure cutter with squared recess in vise as shown in Fig. 12.

(5) Place socket punch bolt through die. See Fig. 12.

(6) Place bolt through pilot hole in chassis.

(7) Screw bolt into cutter until "finger-tight".

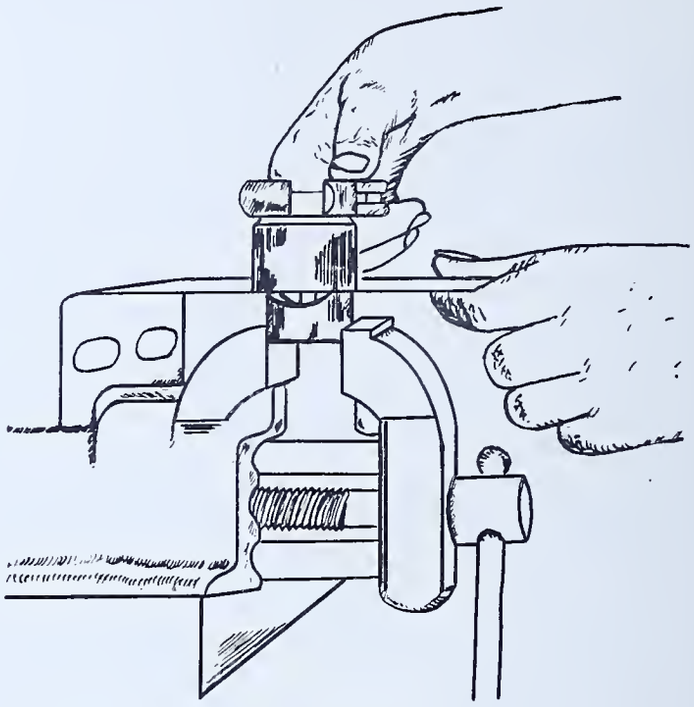

FIG.-12

(8) Adjust end wrench to fit head of bolt as shown in Fig. 12.

(9) Turn bolt clockwise with wrench until the punch has completely cut through the chassis.

(10) Disassemble socket punch to remove metal.

(11) Reassemble socket punch.

(12) Finish the edge of the hole with a half round file.

Note: If a hole is to be punched for a tube socket, it is better to make the socket hole first, and then drill the socket mounting holes. This will insure that the mounting hole and socket hole centers are properly aligned.

b. Cutting with circle cutter

Note: Large circular holes are cut with a circle cutter, which can be adjusted to the size hole desired. Except for its being adjustable a circle cutter is similar to a drill in making holes.

(1) Check cutter to be sure it is properly placed and secure in cross arm (see Fig. 13). Tighten set screw holding cutter in cross arm if necessary

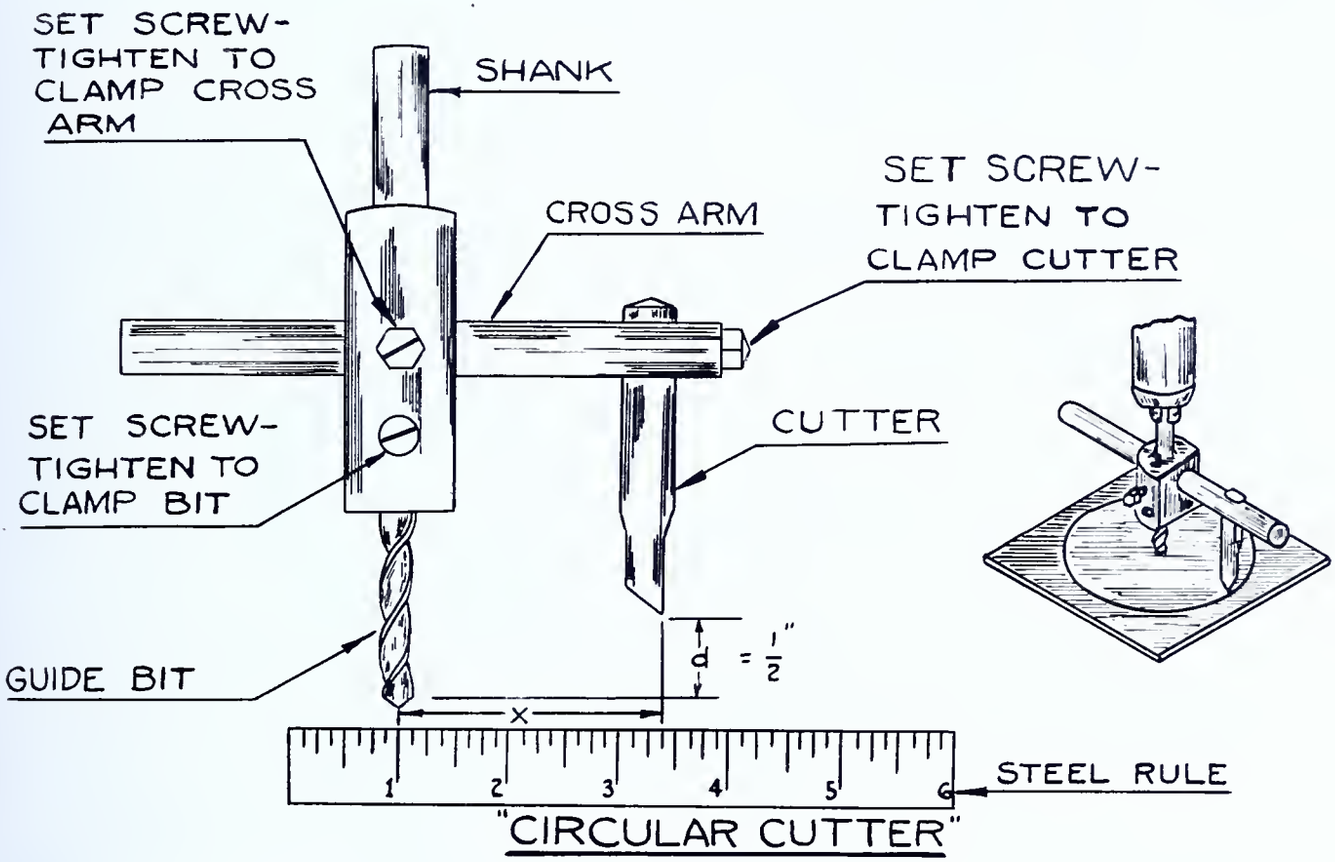

"CIRCULAR CUTTER"
FIG.- 13

(2) Determine size of hole to be cut.

(3) Loosen set screw holding cross arm of cutter (see Fig. 13). Use screwdriver or socket wrench.

Caution: Use correct size screwdriver in loosening and tightening screws.

(4) Set position of cross arm so distance "X" is one-half diameter of hole to be cut. See Fig. 13.

(5) Tighten set screw, clamping cross arm securely.

(6) Tighten set screw or nut holding guide bit in place. See Fig. 13.

(7) Place shank of circle cutter in chuck of drill press or hand brace.

Caution: Make sure the shank is properly placed in chuck.

(8) Place work on wooden block which supports the entire circle to be cut and center punch the hole.

(9) Place end of guide bit on center punched mark and drill hole with guide bit. See Fig. 13.

(10) Continue pressure until cutter has cut through the material.

Note: In cutting a hole in sheet metal it is often easier to turn the sheet over after metal has been cut half way through and cut from the opposite side until circle is cut out.

c. Cutting with Chisel

Note: Large rectangular or irregular holes are cut with cold chisel and hammer.

(1) Scribe the limit lines of hole as shown in Fig. 14.

(2) Scribe another mark inside this outline and parallel to it. This margin is a center line for a series of holes to be drilled as shown in Fig. 14. The exact distance of this inner margin will be $\frac{1}{2}$ the size of the drill used ($\frac{1}{4}$" drill - 1/8" margin).

(3) Place chassis on a wooden block and center punch hole positions, approximately 3/8" apart along the margin line.

(4) Drill required holes. ($\frac{1}{4}$" is the usual size). See Fig. 14.

(5) Hold chisel at a slight angle as in Fig. 15, leaning away from the direction of cut.

(6) Cut along the scribed inside line between the drilled holes by striking chisel sharply with a hammer. This should free the center piece.

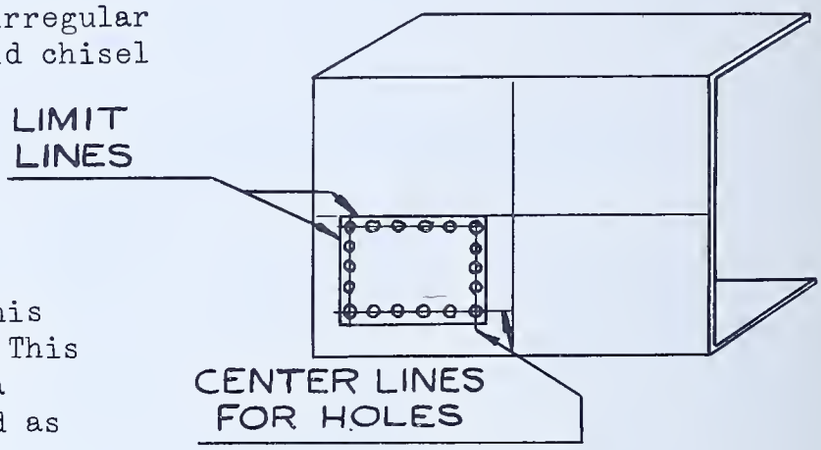

FIG.-14

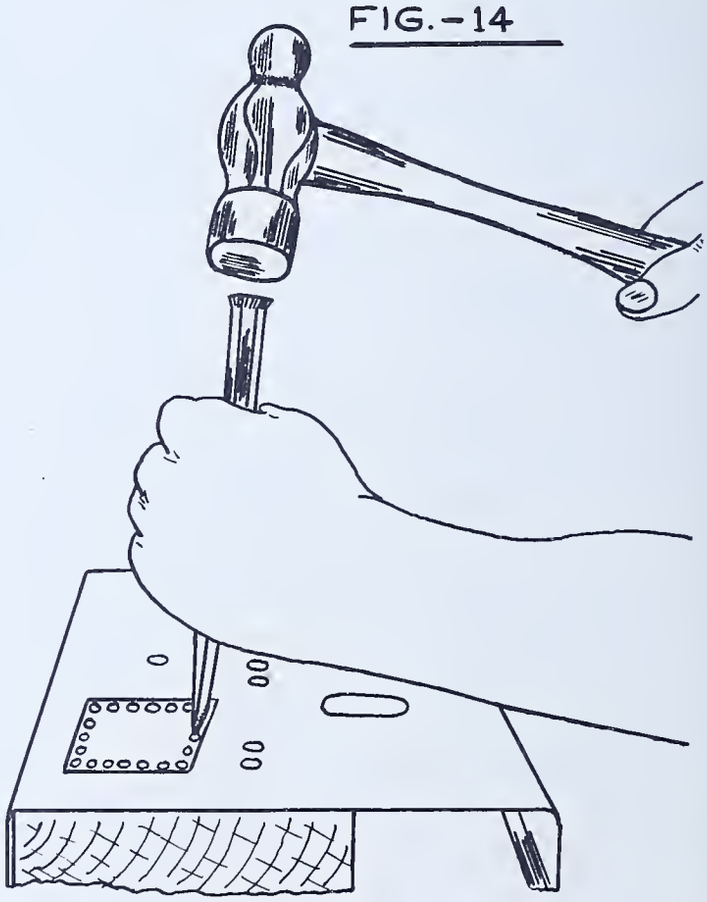

FIG.-15

(7) Remove block, and if necessary knock out the center piece with a hammer.

(8) File ragged edges of hole to the scribed limit marks.

(9) Place chassis on metal or wooden block as shown in Fig. 16.

(10) Remove warp, bends and kinks from chassis with a mallet. See Fig. 16.

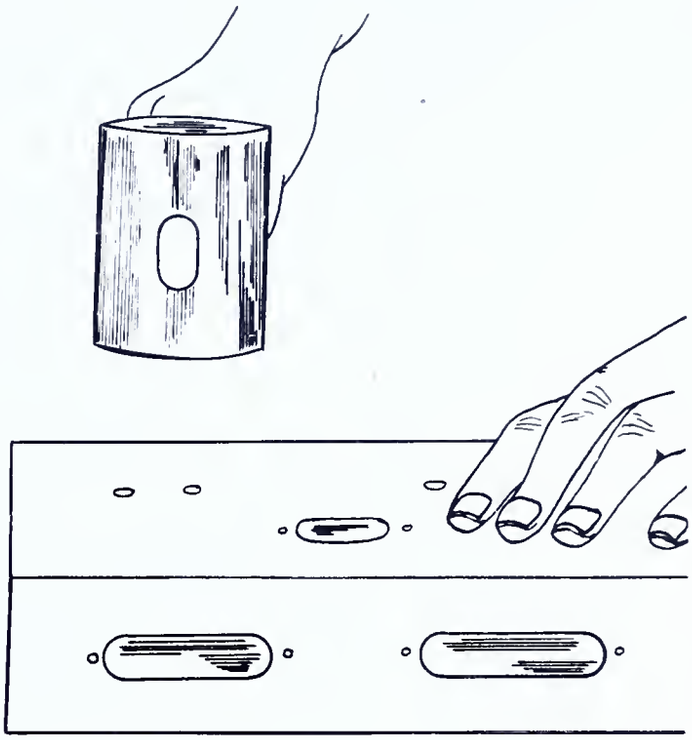

FIG.-16

Note: When using a mallet start at a point remote from the hole, and work around and toward the hole striking chassis as flat as possible with the mallet. Turn chassis over from time to time and go through the same procedure on both sides of the metal being straightened.

QUESTIONS

Place the answers to these questions in your notebook or on form as directed by instructor.

1. At what angle to the surface should tin snips be held while cutting?
2. Why are the blades of tin snips closed just short of full length while cutting? What determines the length of cut?
3. Why is a mallet preferred to a hammer in forming metal?
4. Why are center lines drawn?
5. Why is it not good policy to go over a scribed line the second time?
6. Why are secondary center lines drawn? How are they located?
7. What governs the location of a part on the chassis? Does this effect the relative position of the parts?
8. How is the distance between holes found where it cannot be measured directly with a steel scale?
9. Why are holes center punched before drilling?
10. What is the common method for making small holes?
11. How are burrs removed from the edges of holes too small for filing?
12. Name three common methods of making large holes in a chassis. Explain each method.
13. Why must a chassis be backed by a wood or metal block before center punching?
14. In mounting a tube socket why should the socket punch hole be made before the mounting holes?
15. Why is a scriber used in preference to a pencil for final marking of a chassis?

JOB 6

THE MULTIMETER

The purpose of this unit is to explain the construction and operation of the multimeter. The movement, the scale, the zero adjustment, and the unit functions of the voltmeter, ohmmeter, and milliammeter are described.

A schematic diagram, wiring diagram, and templates are provided for constructing a d-c multimeter. A diagram and brief discussion of the multimeter as adapted for a-c voltage reading is also provided. General instructions in the use of the instrument are provided under the heading "Summary on Use of the Multimeter."

THE MOVEMENT

General Information:

Three fundamental measurements that have to be made most frequently in radio work are: electo-motive force in volts, current in amperes or milliamperes, and resistance in ohms.

The instruments to measure any of these qualities are all built around a common movement. The instruments used are called respectively the voltmeter, the ammeter or milliammeter, and the ohmmeter. An instrument which measures more than one of these units is called a multimeter.

The usual movement is of the moving coil type and consists of the following parts:

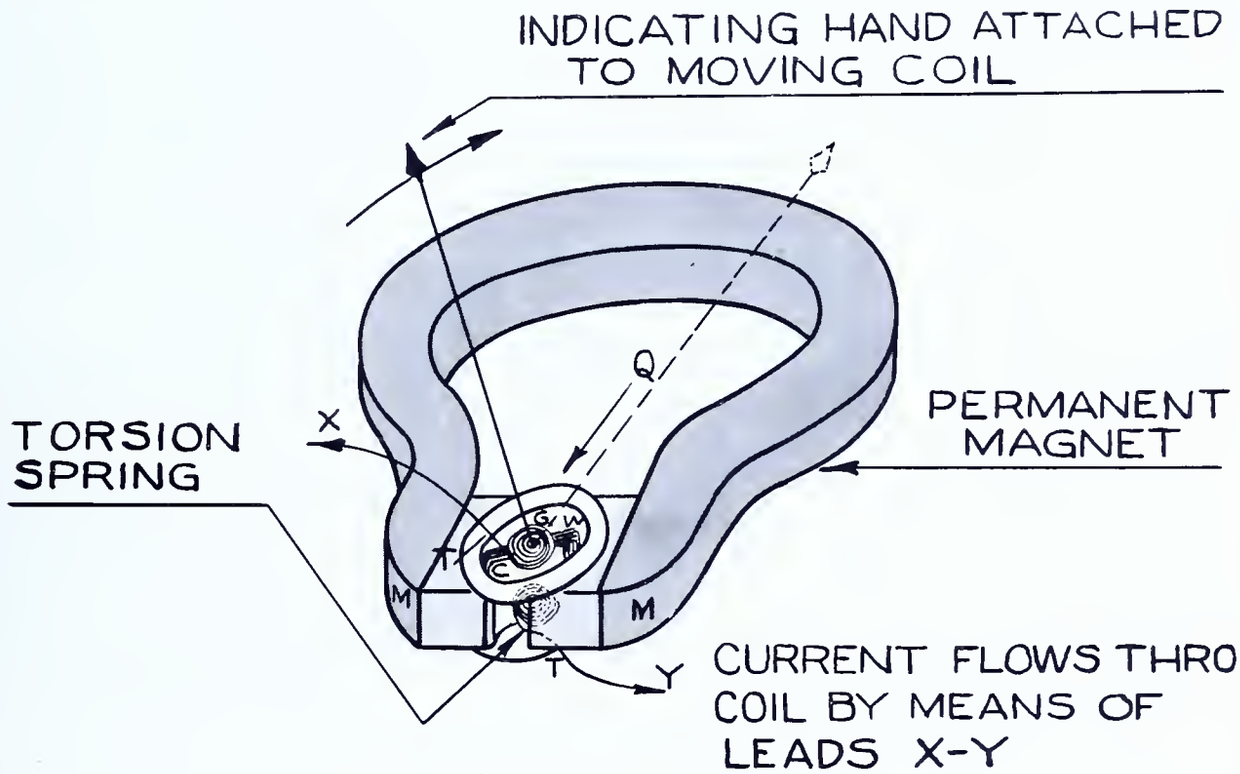

FIG.- 1

1. An indicator needle, attached to a wire wrapped form, (coil C), is mounted on a pivot which turns in the magnetic field of a permanent magnet (M).

2. The form is wound with fine wire (W), with leads brought out through light springs (G) to two terminals (T). The piece Q is a non-magnetic support for the coil form.

3. The springs serve-

   (1) To carry current to the coils, and
   (2) To position the coil and pointer to zero reading when no current is flowing.

4. When current flows through the coil of the instrument, it sets up a magnetic field around the coil.

5. Because of the presence of this magnetic field within the field of the permanent magnet, the coil with its field tends to rotate on its shaft to line up with the poles of the permanent magnet in accordance with the laws of magnetic repulsion and attraction.

6. Within the scale of the instrument, as the current in the coil increases the greater is its magnetic action, and the greater is the deflection of the pointer as the coil and pointer come more closely to the axis of the permanent magnet. The scale defines the working range of the instrument.

The amount of current necessary to cause full scale deflection is referred to in describing the sensitivity of a movement; for example, a 1 milliampere or a 50 microampere movement. (1 milliampere = .001 ampere and 1 microampere = .000,001 ampere) Another way to say the same thing is to describe it as a 1000 ohms per volt, or a 20,000 ohms per volt movement.

Examination of an instrument movement will reveal that it is a very delicate device. Any undue jarring or bumping will spoil the magnet, the spring, or the coil mounting.

A current flow in excess of that needed to cause more than full scale deflection may burn or seriously damage the movement.

To prevent this damage due to excess current it is necessary to select an instrument able to handle the largest probable value of the unit being measured.

This value may be well in excess of the actual value. Rather than use several different instruments, each of separate range, it is common practice to use one multirange instrument.

Therefore, in measuring unknown values, always use the greatest range first, and then try successively lower ones to get the required range. This cannot be stressed too much. An overload of current will destroy the sensitive coils.

THE SCALE

The deflection of the pointer of the instrument merely indicates current flow through the instrument. To measure the varying amounts of current in terms of pointer deflection, a scale laid out in standard units (or multiples or sub-divisions of those units), is placed under the pointer. Thus the scale of an electrical instrument serves the same purpose as a ruler for measuring lengths or the dial of a clock for time.

The method used in adapting the basic movement to indicate various electrical measurements is such that the current flow through the instrument coil, which causes the deflection of the pointer, is in some proportion to the total voltage, current, wattage, etc., being measured by the instrument.

Therefore scales are graduated to read those specific units such as volts, amperes, watts, ohms, microfarads, cycles per second, etc. The voltage and current scales are uniform in spacing and their reading is quickly learned.

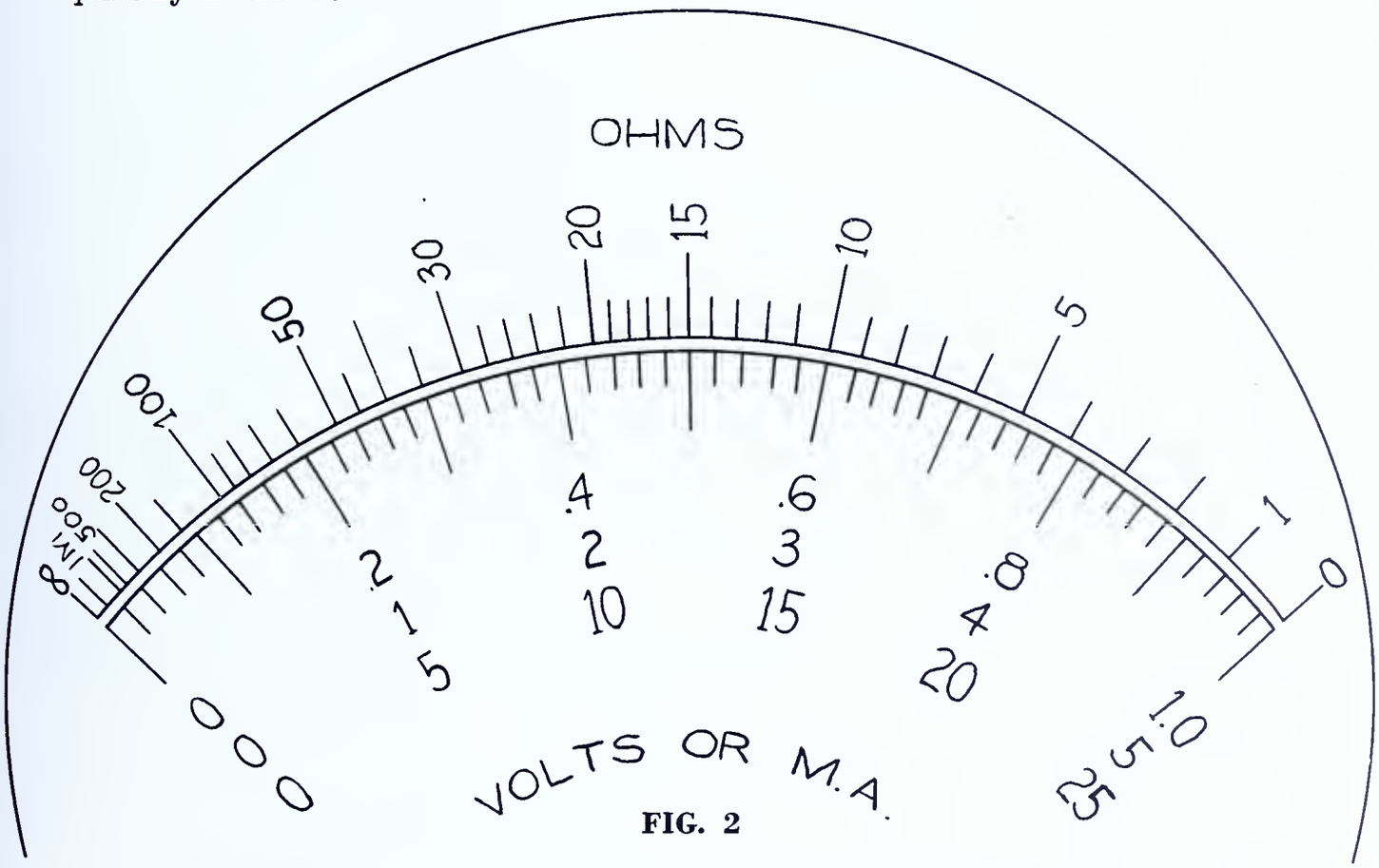

FIG. 2

Every tenth line on the scale of Fig. 2 is numbered 1, 2, 5 or some decimal multiple or sub-division of one of those numbers. See lower section of scale, Fig. 2, labeled "Volts or M.A." (Milliamperes).

The scale measuring OHMS is on the top of the arc of the scale. The spacings are not even and are read from the "full deflection" side of the instrument. Note how the range of this scale runs from 0 to 1000, with the numerical value of the individual divisions increasing toward the left side of the scale. When no current is flowing, the resistance cannot be measured and hence is not readable. Such an indication is ∞ (infinity). Note that the line mark for zero current, zero voltage, and infinite resistance coincide.

READING THE SCALE OF THE MULTIMETER

A. Major Scale Divisions

1. Ascertain the unit (volts, M.A., ohms) being measured and the range being used by referring to the selector switch or pin jack marking.

2. In reading within this range, consider only that row of scale numbers which is so designated, thus: 0-25, or 0-5, etc.

3. Note that the major divisions are numbered. When the indicator points to such a marked division, the reading is easily understood.

   Note how a single position of the pointer indicates different numerical values depending upon the scale being read.

   Thus in Fig. 3, the reading on the 0-25 scale is 15.

   The same indication on the 0-5 scale is 3.

   When the selector switch is in the 0-500 volts position, the reading would be taken on the 0-5 scale, then multiplied by 100, giving this position a value of 300.

   NOTE: The pointer indication should be located by looking perpendicular to the scale. If vision is inclined, there will be an error in the reading.

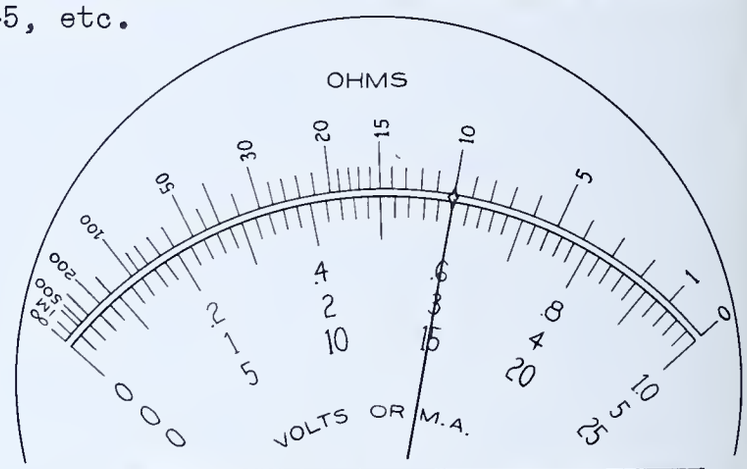

Scale	Reading
0-25 0-250	15 V. or M.A. 150
0-5 0-50 0-500	3 30 300
0-1.0 0-10. 0-100.	.6 6. 60.
Ohms Ohms x 100	10. Ohms 1000. Ohms

FIG. 3

In constructing a multimeter, it may not be possible to obtain a movement whose scale provides graduations in ohms.

The multimeter of this unit may be used as an ohmmeter if: (a) the basic movement is a 0-1 M.A. unit, (b) The scale available has 50 divisions, (c) The pointer deflections obtained in measuring resistance are transposed from the M.A. scale to the ohms scale as follows:

1. Set and connect multimeter to function as an ohmmeter.
2. Read the pointer position in terms of M.A. (for example 0.3 M.A.)
3. Mentally "spot" this reading on the multi-range scale of Fig. 2.
4. Read this point in terms of ohms on the ohms graduated scale. For example, 0.3 on the M.A. scale corresponds to 35 on the ohms scale.
5. Multiply this reading on the ohms scale by the multiplier indicated by the ohms range selector switch. For example, 35 x 1 or 35 x 100.

B. Unnumbered Scale Divisions

4 a. To Read the Volts or M.A. in Fig. 4.

(1) The indicator is on an unnumbered division which divides the numbered interval into two equal parts.

(2) Such a line has the value of one-half the interval between the adjacent markings.

(3) Secure the difference between the adjacent marks and divide by the number of intervals whose value is desired. On the 0-25 scale, this would be 10-5 = 5; 5 ÷ 2 = $2\frac{1}{2}$. The interval would be 2.5 and is added to the marked reading which is next below. (2.5 ÷ 5.0) The reading would be 7.5 on the 0-25 range.

On the 0-5 scale, the indicator is half-way between 1 and 2, the intermediate mark then is .5 and the reading therefore is 1.5. On the 0-1 scale, the indicator is half-way between .2 and .4, the intermediate mark is .1 and the reading is .3.

4 b. To Read the Ohms in Fig. 4.

(1) Note that the indicator points to a division which divides the sector 30 to 50 into four parts.

(2) The interval 30-50 is twenty points and therefore the four unmarked subdivisions although unevenly spaced, have each a value of 5. The unmarked divisions, therefore, in this interval, are values of 35, 40, and 45, and the reading indicated is 35.

(3) Apply multiplier indicated by range selector switch.

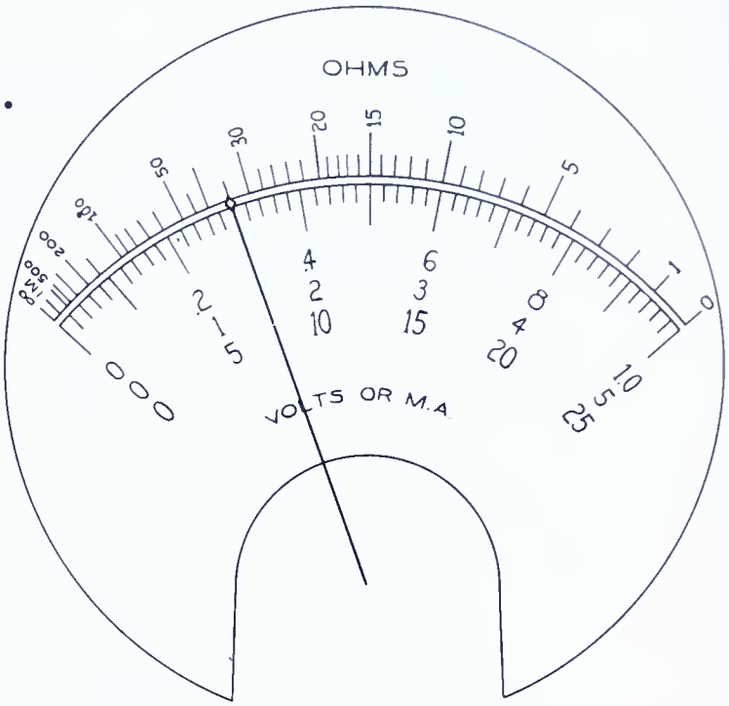

Scale	Reading
0-25	7.5 V. or M.A.
0-250	75.
0-5	1.5
0-50	15.
0-500	150.
0-1.0	.3
0-10.	3.
0-100.	30.
Ohms	35. Ohms
Ohms x 100	3500.

FIG. 4

C. Fractional Parts of Scale Divisions

5. When the pointer indicates a fractional part of any division the above procedure is followed and an estimation of the fractional part is added. See Fig. 5.

   (1) On the 0-1.0 Volts or M.A. scale the ten minor divisions between .2 and .4 each indicate .02. This pointer is half a division past .2 or .2 plus .01. Its reading is .21.

   (2) On the 0-5 Volts or M.A. scale a minor division is .1, half of that is .05. The reading is 1. plus .05 = 1.05.

   (3) On the 0-25 Volts or M.A. scale a minor division is .5, half of it is .25 and the reading 5 plus .25 = 5.25.

   (4) On the ohms scale the pointer indicates three-fifths of the division 50-60 and would be read 56.

   (5) Apply multiplier indicated on range selector switch.

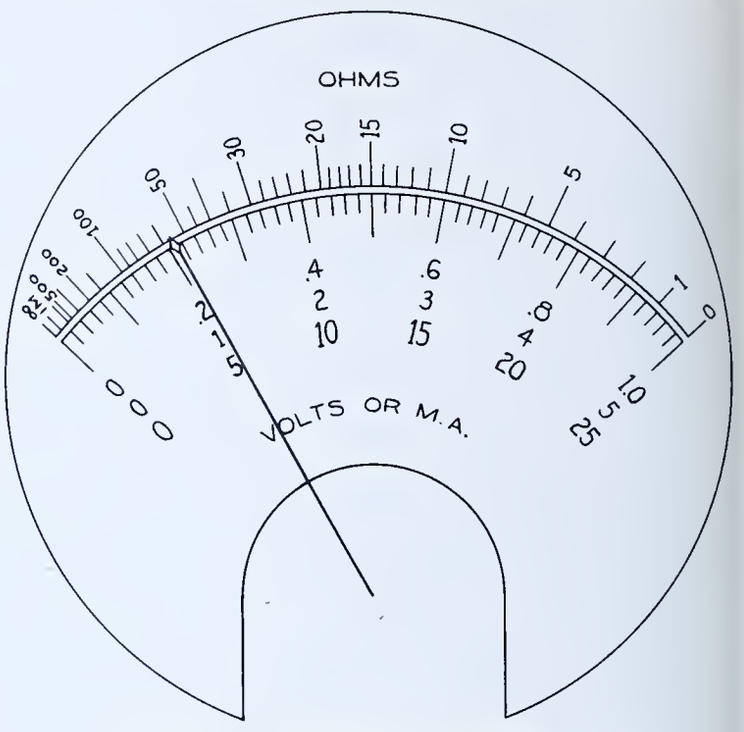

Scale	Reading
0-25 0-250	5.25 V. or 52.5 M.A.
0-5 0-50 0-500	1.05 10.5 105.0
0-1.0 0-10. 0-100.	.21 2.1 21.0
Ohms Ohms x 100	56. 5600.

FIG. 5

ZERO ADJUSTMENT

Proper indication of an instrument depends not only on the amount of deflection but on the point from which deflection begins. Zero indication may be varied by temperature changes, jarring or mechanical shocks, stray magnetic fields, mechanical position, or balance of the movement.

It is a function of the coil spring to return the movement to the "at rest" position when no current flows. This "at rest" position should be exactly zero.

A "zero adjustment" is provided to make corrections if the pointer does not return to exact zero. See Fig. 6. (Note: This "zero adjustment" is not to be confused with any ohmmeter adjustments of similar name described in the ohmmeter reference.) "Zero adjustment" operates as follows:

1. The adjustment is usually made by turning a slotted screw head.

2. The zero adjustment screw should be moved by the thumb nail. It is located on the front of the movement, below the center, being mounted either through the glass or the frame.

3. If thumb nail cannot be used, very carefully and slowly turn the adjusting screw with a screw driver of proper size.

4. This adjustment moves the mounting end on one coil spring so that the position of spring and pointer is changed, thereby aligning pointer with zero on the scale.

5. MOVE ZERO ADJUSTMENT ONLY WHEN NECESSARY.

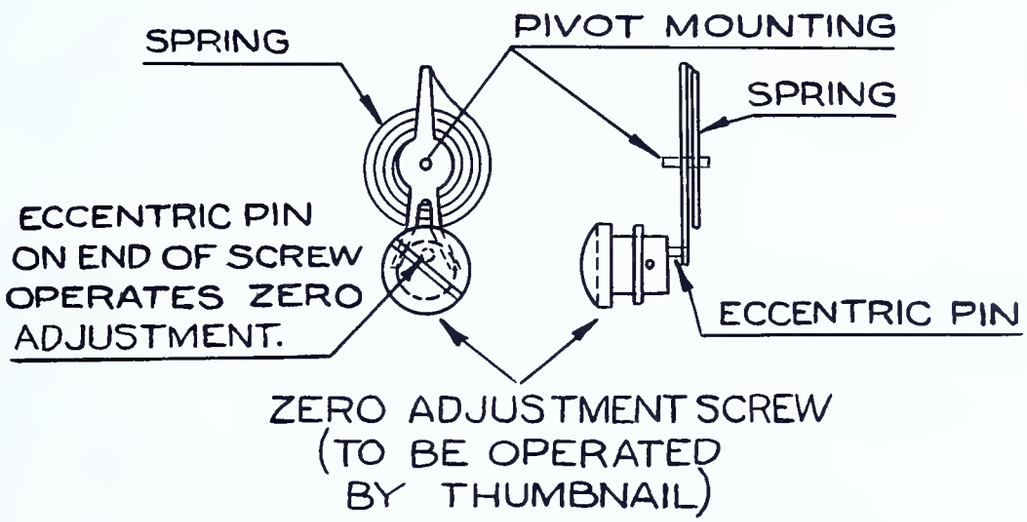

FIG.-6

THE VOLTMETER

The pointer of the instrument indicates flow of current through the coil.

Since this flow of current is directly proportional to the voltage in the circuit, changes in voltage will be indicated in readings on the scale. Thus the instrument can be used as a voltmeter.

Because too much voltage will cause an excess of current flow and a burned-out movement, various resistances of fixed amounts are put into the circuit to reduce the current actually reaching the instrument regardless of the voltage being measured. This is known as changing the range of the instrument.

These various units of resistance, called multipliers, are switched in by means of pin jacks or rotary switches, and the appropriate scale for that range is used in making the reading. The relationship between resistance and range is based upon Ohm's law.

Fig. 7 shows the schematic diagram when separate resistors are used for each step or range. Fig. 8 shows series resistance between steps.

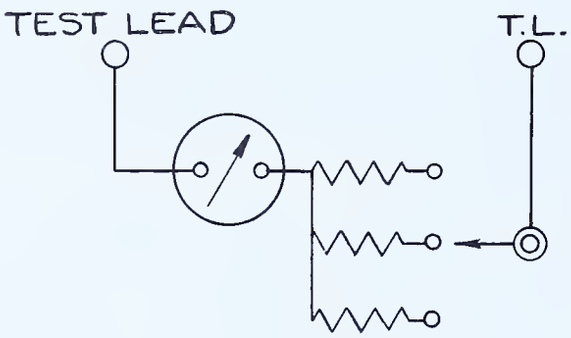

FIG.-7

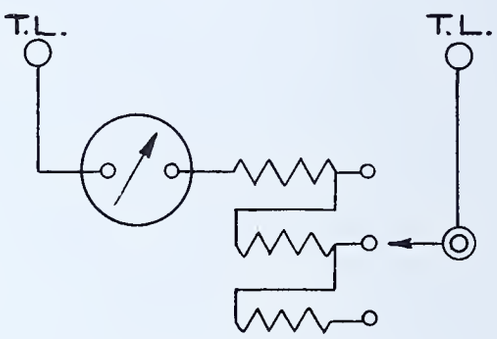

FIG.-8

When measuring voltages whose range is uncertain, always use the largest possible range to be sure you are within the scale of the instrument. If there is no apparent indication then try the next lower range until a reading can be obtained.

DO NOT GUESS VOLTAGES: USE THE HIGHEST RANGE FIRST, THEN A PROGRESSIVELY LOWER ONE UNTIL A READABLE DEFLECTION IS OBTAINED.

THE OHMMETER

The current in any circuit depends upon the electrical pressure and the resistance. Variations in either voltage or resistance therefore will affect the current flowing through an instrument in the circuit.

The instrument when used as an ohmmeter is provided with its own voltage and since this voltage is kept constant, any indicated variation of current change must be due to change in resistance. Thus the resistance can be measured through the deflection of the movement of the instrument.

The Series Type Ohmmeter

As more resistance (R) is placed on the circuit illustrated in Fig. 9, less current flows and the pointer indicates lower readings of current.

Therefore the larger the current reading, the smaller is the resistance. Conversely the smaller the current reading, the larger is the resistance. Hence the scale for reading ohms has its greatest value at the zero current point.

When no current flows it is because there is a value of resistance greater than can be measured by that instrument and the resistance is read as infinity, marked as "Inf." or ∞ . A full scale current deflection would indicate absence of resistance.

In order that the movement is not burned out by excessive current, resistance is provided as part of the measuring instrument, in "series" with the circuit, see "r", Fig. 9.

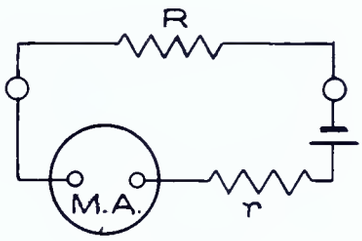

FIG-9

When no resistance other than that of the instrument is present the pointer will deflect to the zero resistance point.

This limiting resistance is so selected that the zero resistance point will be within the current scale of the instrument. Usually the full scale current point is the zero resistance point.

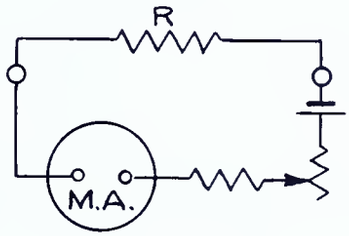

FIG-10

In most instruments of this type, see Fig. 10, the resistance consists of a unit of fixed value and a variable unit which may be adjusted to provide for the variations of conditions met, such as dry-cell voltage variations, resistance of test leads and actual current required by the instrument.

With the test leads of the instrument held together ("dead short"), the ohmmeter adjusting knob is turned until the indicator needle is on 0 ohms.

To provide for extension of the range of the instrument, shunt resistors are added to bypass a portion of the current. See Fig. 11.

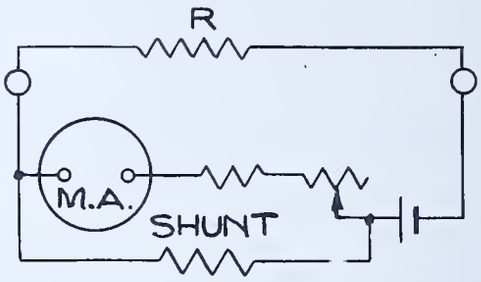

FIG.-11

The Shunt Type Ohmmeter

In measuring low resistances the shunt type ohmmeter is most frequently used. In this ohmmeter the current is divided between the movement and the resistance being measured. Fig. 12.

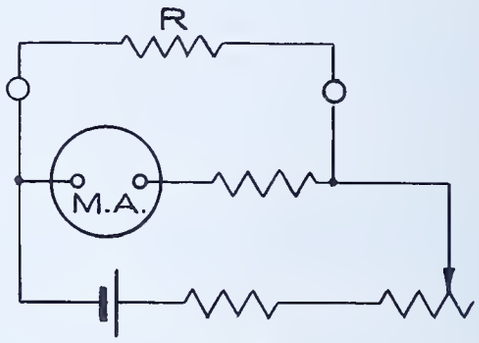

FIG.-12

The resistance being measured by this method provides an added channel for the current to flow, reducing the current received by the movement.

In this instrument when the resistance measured is large, the current it drains is small, and the current available to the movement is larger, and hence the pointer indicates more current flowing through the instrument, as well as showing the high resistance of the unit being measured.

When the resistance is small the current available to the movement is less so that the deflection will be smaller and the reading will be correspondingly less.

Therefore the resistance scale in the shunt type ohmmeter will read zero at the same point as the ammeter and voltmeter.

THE MILLIAMMETER

The movement of the instrument is made of such fine wire that even slight overloads will destroy it. To keep the instrument reading within its established range, and prevent overload, some provision must be made to divide the current of the circuit. The "shunt" resistor is used for this purpose.

The resistance of the shunt will determine the range of the instrument. If the resistance of the shunt is small, then a larger amount of current will pass through the shunt and less through the movement. This increases the range of that instrument, since a larger current can actually be applied without burning out the movement. Conversely when the shunt resistance is larger, less current will pass through the shunt and more current will be available through the movement. The current range that can then be measured will be smaller.

Various ranges are obtainable by changing the shunts by means of switches provided for that purpose. The smallest range is obtained when the movement is used without a shunt.

The diagram below shows the wiring of the milliammeter. Fig. 13-A shows a single shunted milliammeter. Fig. 13-B shows a multi-range milliammeter.

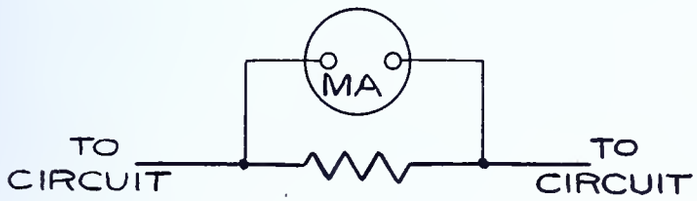

A.
SINGLE RANGE MILLIAMMETER

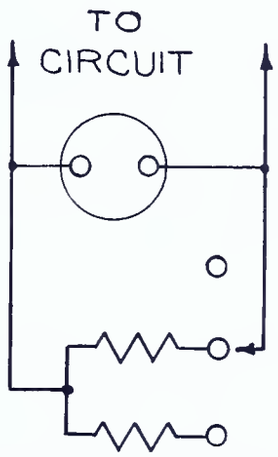

B.
MULTI-RANGE MILLIAMMETER

FIG.-13

For application in measuring current refer to Reference Z, "Summary on the Use of the Multimeter," page 115.

THE MULTIMETER COMBINATION

The combination of the functions of a voltmeter, ohmmeter and milliammeter, whereby a single movement is utilized to provide the required reading, is shown in the following schematic diagrams.

To serve the need for instruments of varying capacities, multi-range instruments are provided. Fig. 14 is the schematic diagram of such a multimeter.

Very carefully check these emphasized sections with the appropriate unit as shown in Figs. 7, 11 and 13-B.

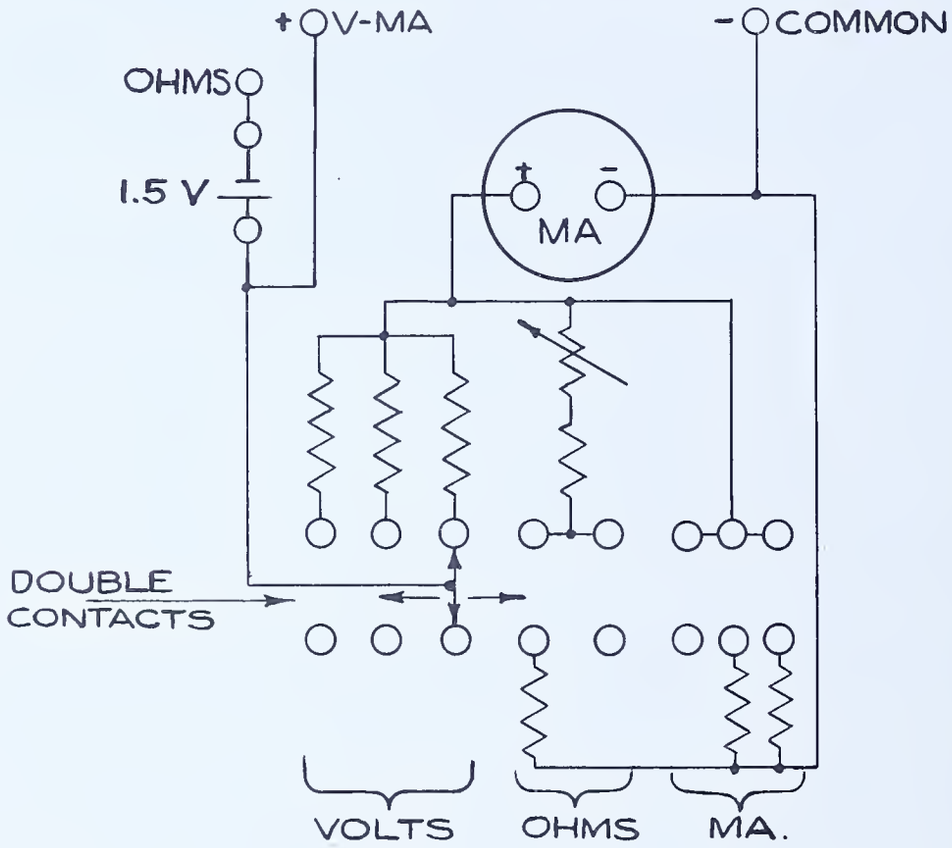

SCHEMATIC DIAGRAM
FIG.-14

THE A-C MULTIMETER

Many multimeters are adapted to enable reading of a-c values.

Alternating current is characterized by a regular change of direction of current which occurs many times per second. Any terminal will be positive only half the time and negative the other half.

The pointer of the movement could not "keep up" with this change and would not give true reading because of the reversals of flow. Some means must be provided to cause the pointer to move in only one direction, regardless of the reversals of current. This is done by converting a small portion of the alternating current into direct current sufficient to operate the movement. One device which converts alternating current into direct current is known as a rectifier.

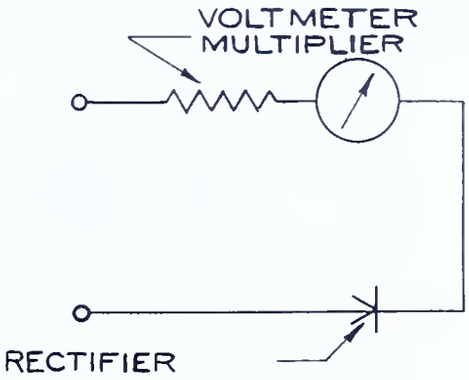

FIG.-15

Other calibrations on the scale than those used for d-c readings must be provided for a-c readings.

In measuring voltage it will be recalled that resistance was put in series with the movement. Fig. 15 illustrates the use of a half-wave rectifier in measuring a-c voltages. This type rectifier permits pulsations of current in one direction only. However, the voltage in the direction that the current is restricted from flowing may damage the rectifier.

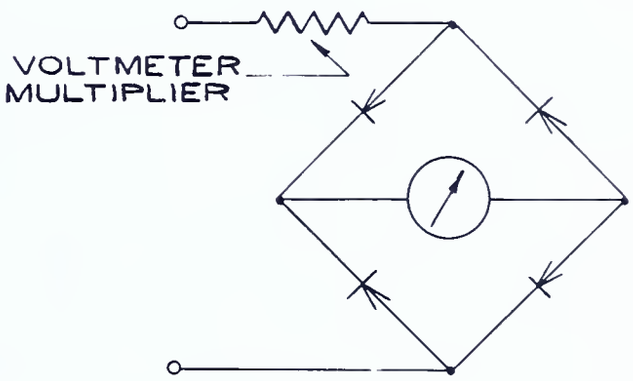

FIG.-16

Fig. 16 illustrates the full wave circuit, an improved method which prevents damage to the rectifier from reverse voltage, and also provides a more sensitive reading.

The provision for reversal of current flow is illustrated in Figs. 17 and 18. Note that regardless of the direction of current in the line A-B, the "bridge" arrangement of the rectifier causes the current to flow always in the same direction, C-D, through the movement.

By installing certain additional parts other adaptations of this instrument are possible.

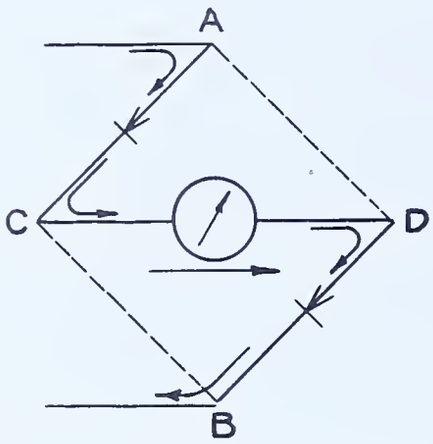

FIG.- 17

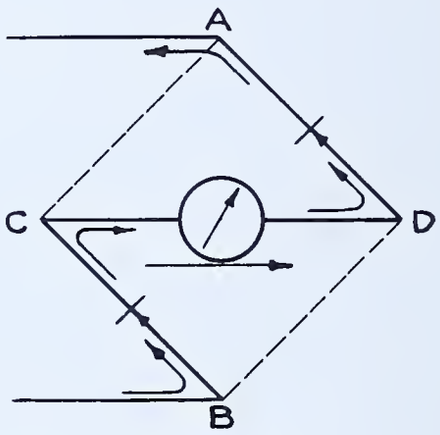

FIG.- 18

SUMMARY ON USE OF THE MULTIMETER

Caution must be taken to connect the instrument so that the movement is not burned out. Observe these precautions:

1. Before using any new instrument, read all the information on the scale, on the panel or cover, and in the instruction sheet. Review this information in case of any doubt.

2. Make sure power in circuit under test is disconnected when using ohmmeter ranges.

3. Be sure to set instrument for the unit to be measured. Do not set the instrument for current if voltage is to be measured.

4. Set to highest range on instrument (voltage or current as the case may be).

5. Place black test lead in negative pin jack, red test lead in positive pin jack.

6. Be sure that test lead insulation is adequate.

7. Develop the technic of using only one hand when handling test leads. Allow this hand to touch only the test lead insulation. Keep the other hand and body away from metal or grounded objects. This will reduce the likelihood of serious high voltage burns and shocks. See Fig. 19.

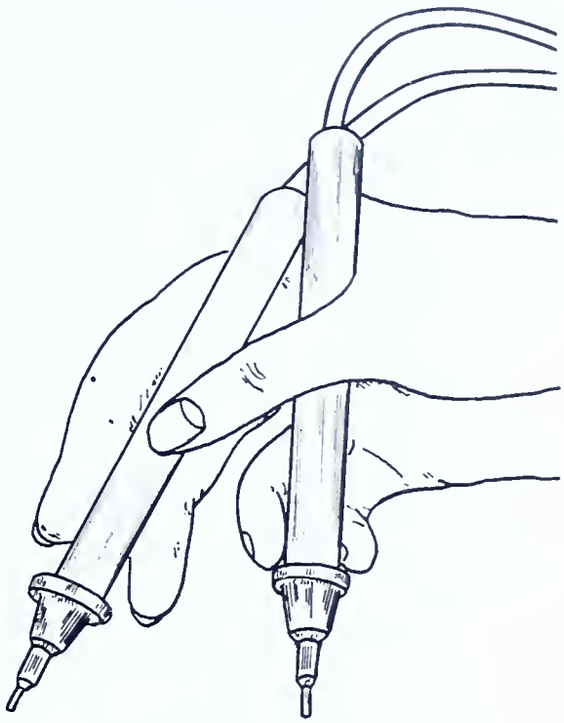

FIG.-19

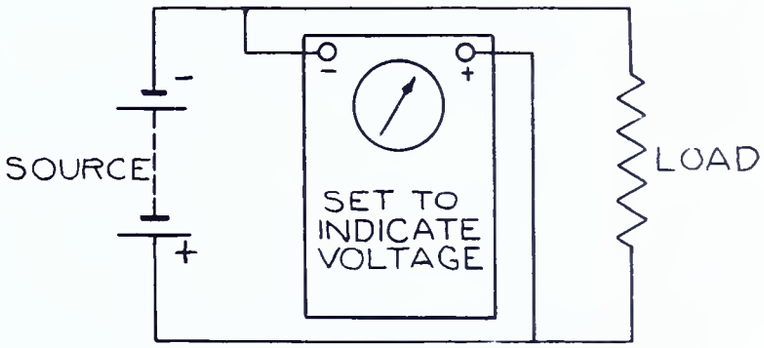

MULTIMETER AS VOLTMETER
FIG.-20

8. Check zero adjustment, use only thumb nail to adjust.

9. Connect to circuit as follows:

   Place multimeter set for voltage determination in parallel or shunt (i.e., across the terminals or ends of the device being tested). Refer to Fig. 20.

Place multimeter set for current determination in series, (in the path of the current going through the device being tested). Refer to Fig. 21.

When prods are used, hold both in same hand or clip negative prod to negative point.

10. When no indication is noted, check that a-c voltage is not present. Commercial frequencies will not operate d-c instruments but a slight flicker of the needle may be noted upon closing and opening the instrument circuit. Use proper instrument for a-c measurements, when required.

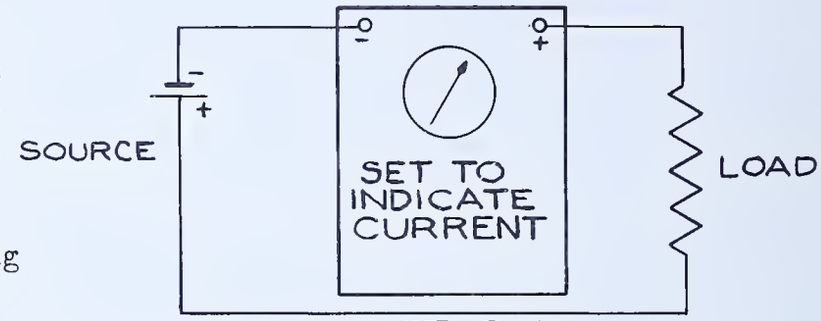

MULTIMETER AS MILLIAMMETER
FIG.-21

11. When the pointer deflection is in the reverse direction, the polarity of the instrument is wrong and the leads must be reversed. This may be prevented if care is taken to connect positive (+) terminal of instrument to positive (+) side of the circuit measured.

12. When indication is very low, remove a test lead, set the selector switch to the next lower range, and replace test lead.

13. If the pointer does not deflect when using instrument, check for (a) alternating current, (b) reversed polarity connections, and (c) too high a range as described in steps 10, 11, 12.

14. Read and record instrument deflection. Be sure that proper range or multiplier is used. Note units involved.

15. Always place instrument with its leads so that it will not be dropped on floor, struck by screwdrivers or other objects, or subject to vibration or other rough use.

16. When finished with instrument, remove test leads, set it to highest voltage range, and return it to stock room. Because of the strong permanent magnet, small iron particles in the air will tend to be drawn into the pole pieces. Therefore the instrument case should be left on the instrument and the glass face should be replaced if cracked.

CONSTRUCT A D-C MULTIMETER

Specifications:

Assemble and wire multimeter in accordance with diagrams and templates provided. Trace the templates found on following pages or secure their tracings from instructor. Do not try to draw through these pages.

Appearance to be neat and well organized.

Panel to be kept free of mars and scratches.

Wiring to be as direct as possible and free of kinks and waves.

Solder is to be properly applied, without excess or loose particles.

All screw fastenings to be tightened to prevent movement of part held.

Switch arm is to be free to turn but not loose enough to wobble.

Substitution of parts and materials at discretion of instructor.

Resistor details "A", "B" & "C" (see following chart)

Obtain three carbon resistors of at least 2000 ohms resistance each, higher values are satisfactory. Wrap on these resistors, (using them as forms), the lengths of insulated copper wire indicated in the following table. Solder this wire to the resistor leads making in effect resistors of the resistance value determined by the copper wire. Alternatives for different wire sizes are given.

Wire Size B & S	Resistor "A"	30 ohm movement "B"	30 ohm movement "C"	100 ohm movement "B"	100 ohm movement "C"
34	58'	28'9"	4'9"	96'	15'2"
36	36'6"	18'	3' *	60'3"	10'
38	23'	11'5"	1'11"	38'	6'4"
40	14'6"	7'2" *	1'2¼"	23'10"	4' *
42	9'2" *	4'6"	9"	15'1"	2'6"
44	5'10"	2'10½"	6"	9'7½" *	1'7"

* Use this wire size for this resistor if available. See that insulation is removed from ends of wire and small wire is soldered correctly.

These three drawings are full size and may be traced to use as templates.

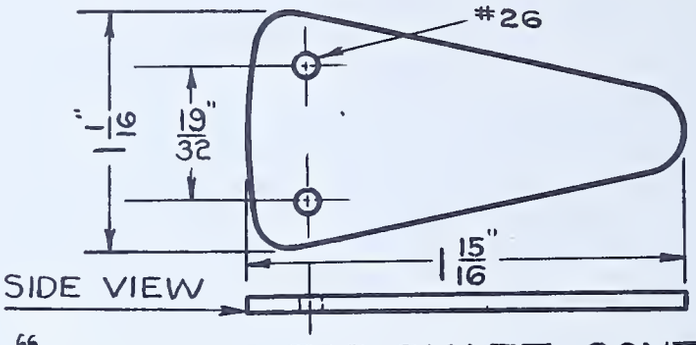

"TEMPLATE FOR SHAFT CONTACTOR"
FIG.-22

Material - Spring bronze preferred
#22 Galvanized sheet will serve
Run grain in long direction

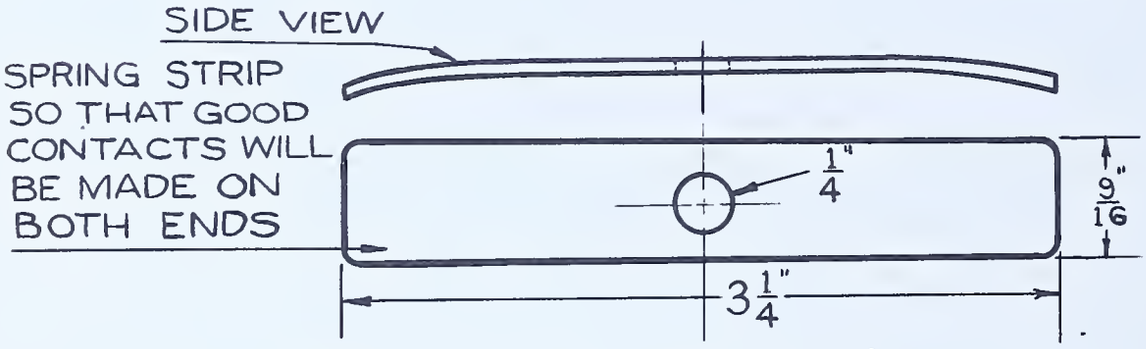

"SWITCH ARM TEMPLATE"

FIG.-23

Material - Spring bronze preferred
#22 Galvanized sheet will serve
Run grain in long direction

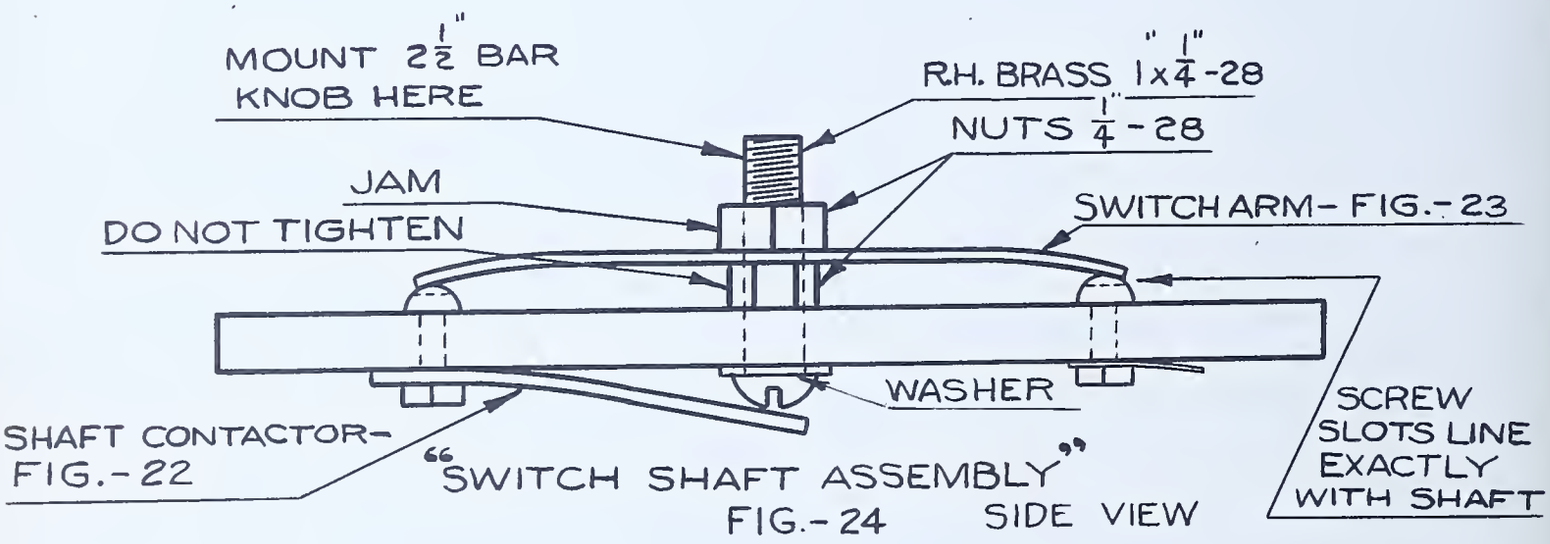

"SWITCH SHAFT ASSEMBLY"
FIG.-24 SIDE VIEW

See Figs. 26 and 27 for front and back of panel view

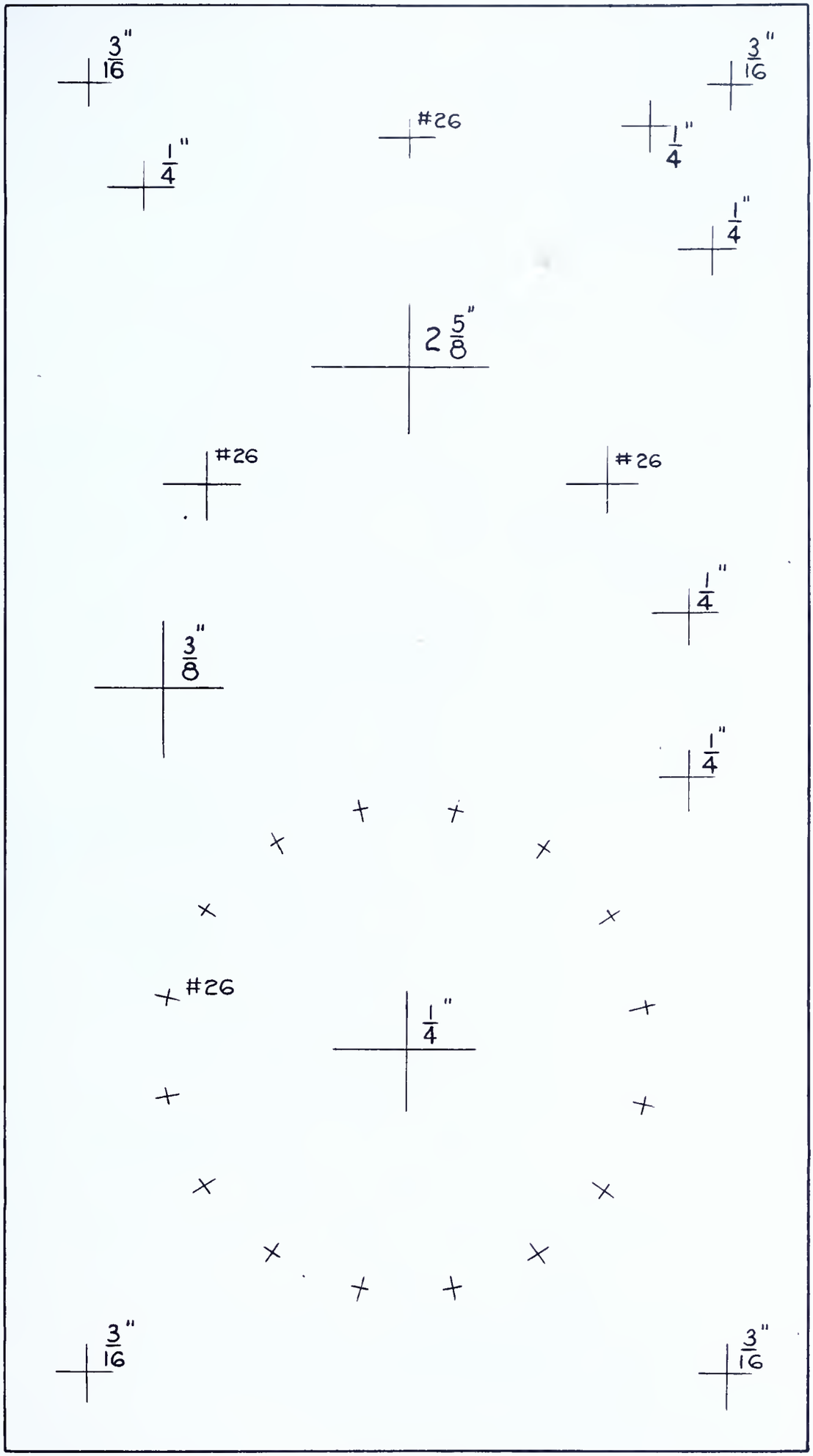

FRONT VIEW

Fig. 25 — DRILLING TEMPLATE FOR PANEL AND MOUNTING JIG

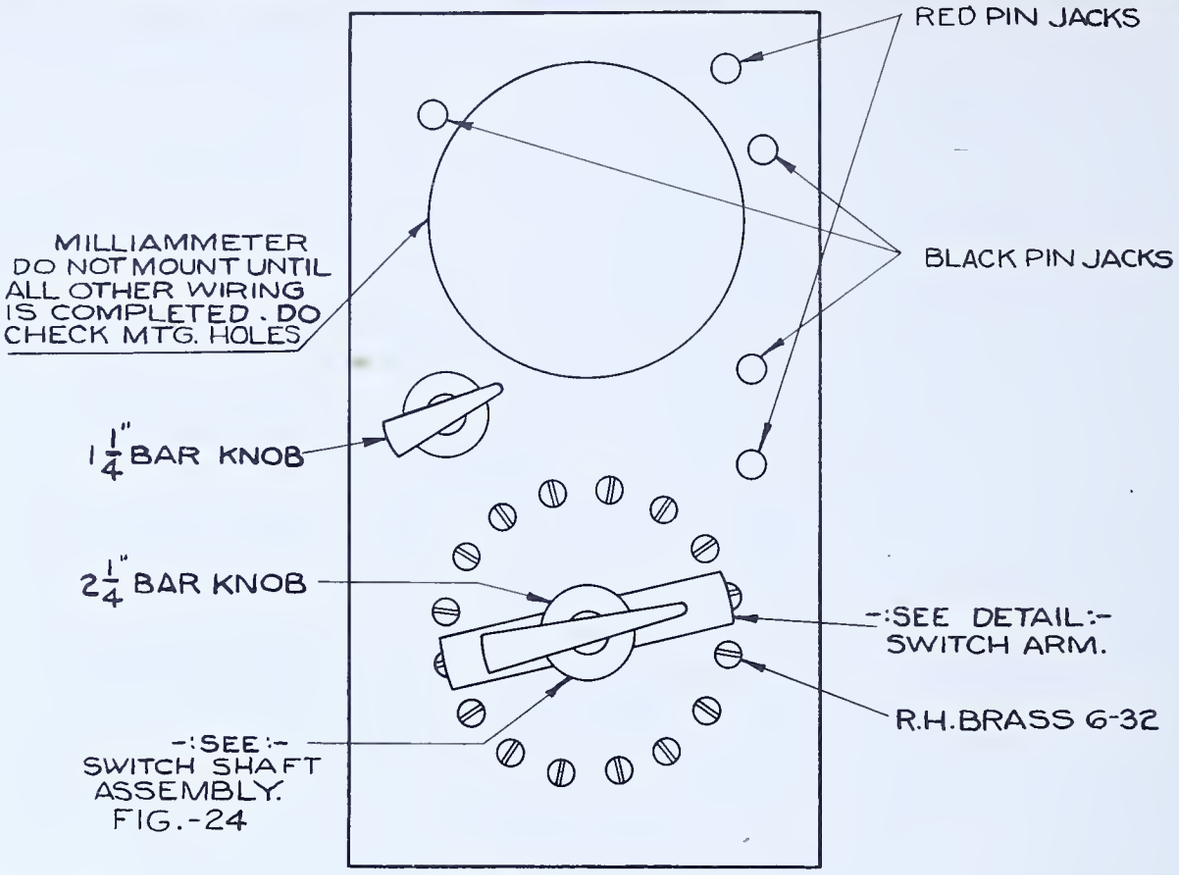

-:PANEL LAYOUT:-
FIG.-26

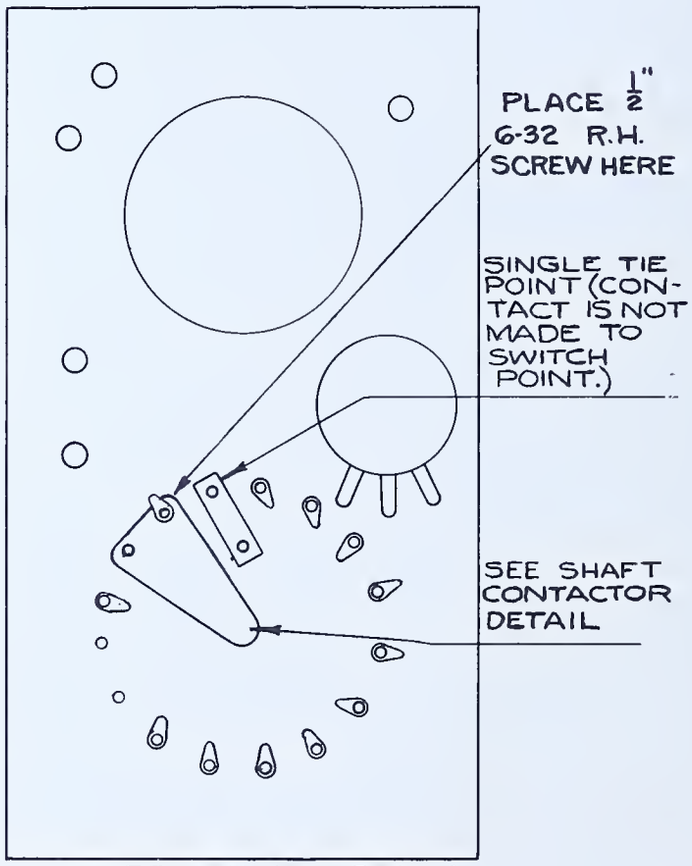

BACK OF PANEL VIEW READY FOR WIRING:- SEE PANEL LAYOUT FOR FRONT OF PANEL.
FIG.-27

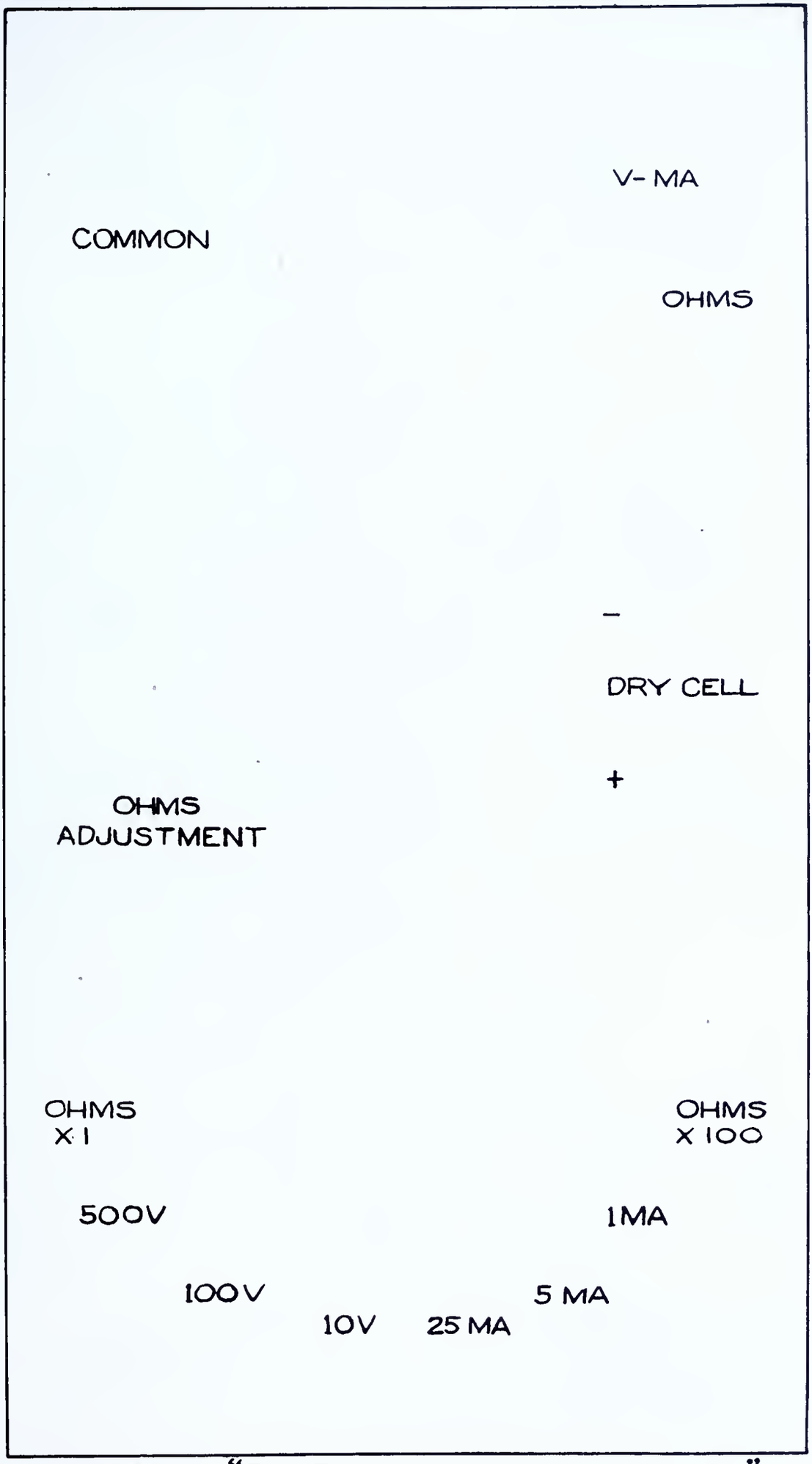

FIG.-28 "PANEL MARKING TEMPLATE"

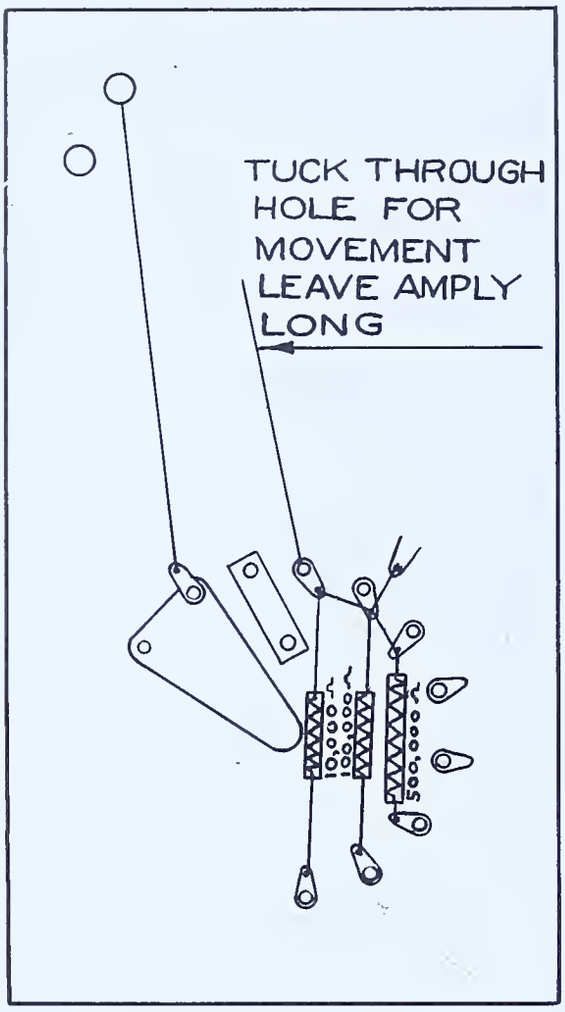

BACK OF PANEL
PROGRESSIVE WIRING
DIAGRAM PART #1
VOLTMETER SECTION
FIG.-29

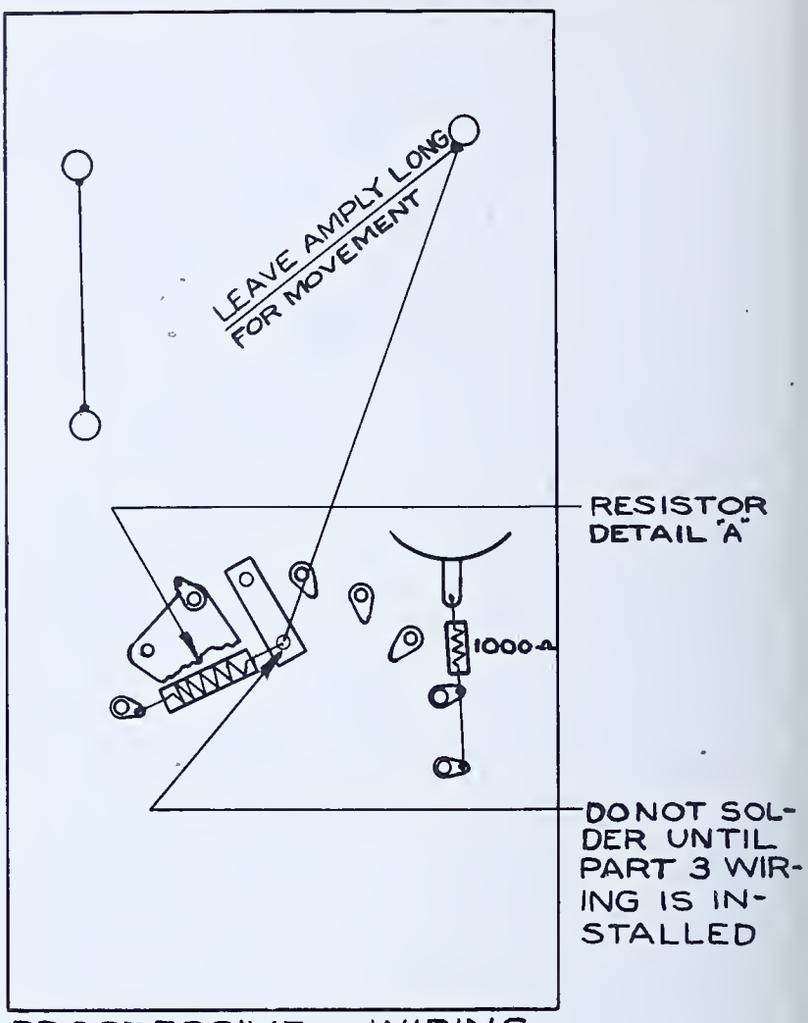

PROGRESSIVE WIRING
DIAGRAM PART NO. 2
OHMMETER SECTION
FIG.-30

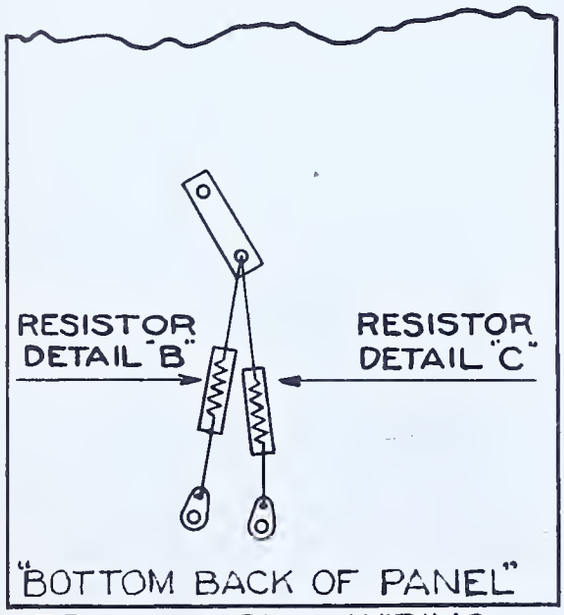

PROGRESSIVE WIRING
DIAGRAM PART #3
MILLIAMMETER SECTION
FIG.- 31

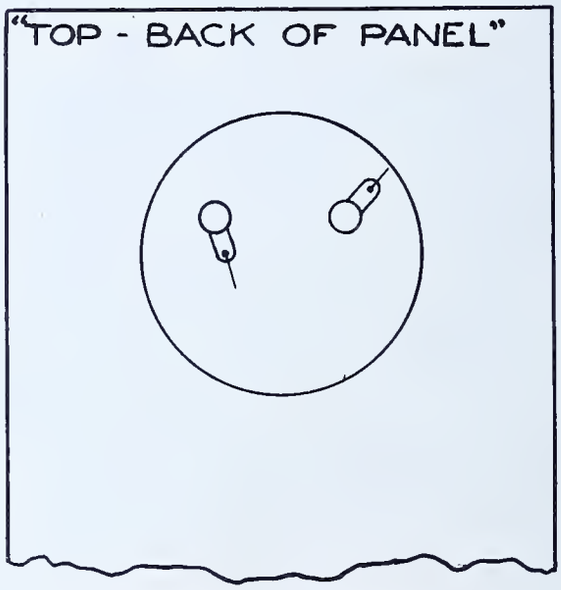

PROGRESSIVE WIRING
DIAGRAM PART NO.4
INSTALL MOVEMENT
CONNECT TO CIRCUIT
FIG.-32

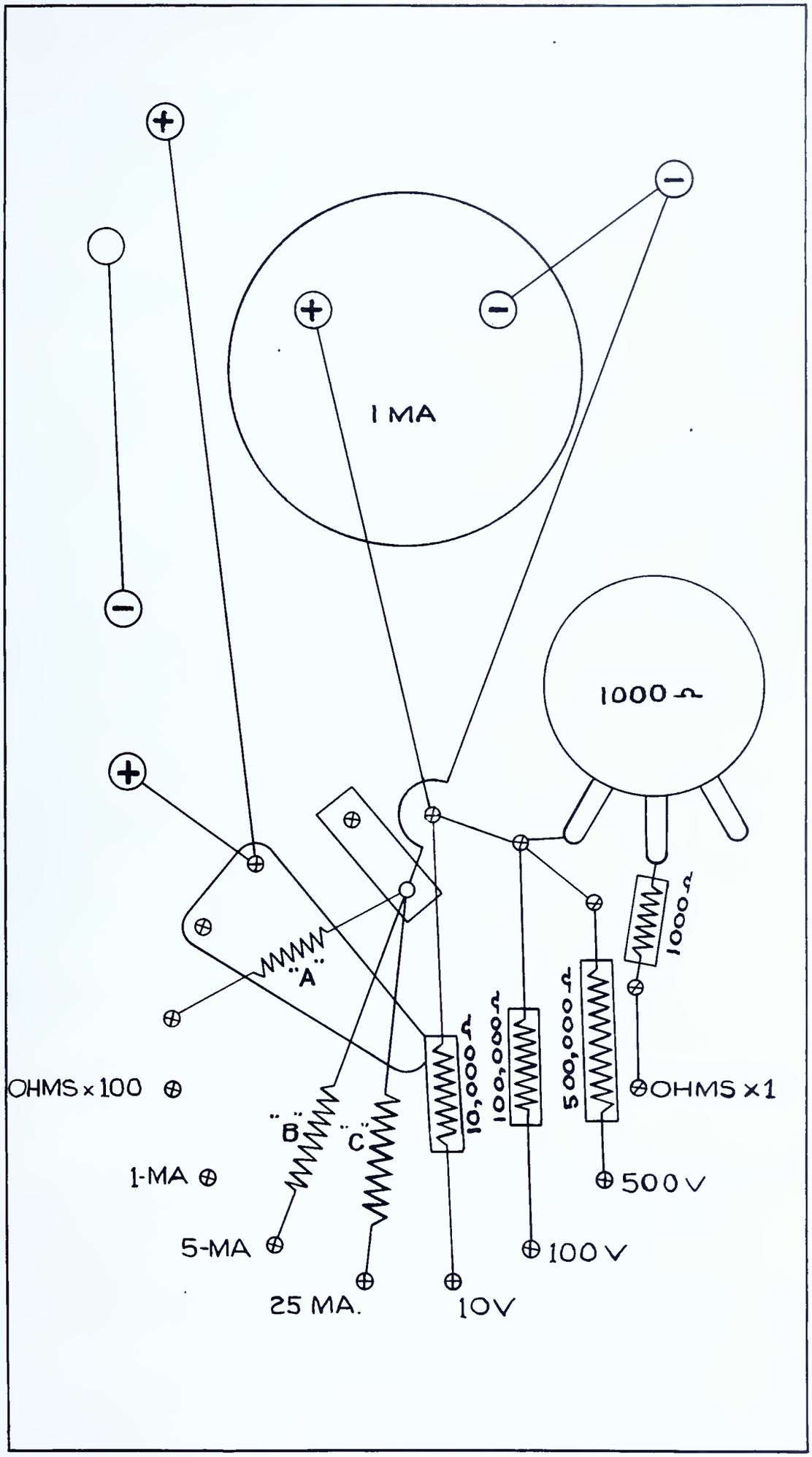

FIG.-33 BACK OF PANEL VIEW, COMPLETED WIRING

Tools needed:

1. Hack saw
2. Hand or electric drill
3. #26 drill
4. 3/16" drill
5. $\frac{1}{4}$" drill
6. Countersink
7. Brace
8. Circle cutter
9. 3/8" drill
10. Tin snips
11. Combination slip joint pliers
12. Long nose pliers
13. Diagonal pliers
14. Medium size screwdriver
15. Small screwdriver (for knobs)
16. Soldering iron
17. Socket wrenches (set)

Materials needed:

1. 1- Piece $\frac{1}{4}$" fiber board 5" x 9"
2. 1- Piece scrap material, wood or fiber board, 5" x 9" or slightly larger
3. 5- Pin jacks; if colored, 2 red, and 3 black
4. 1- Potentiometer 1000 ohms - ohmmeter adjust
5. 1- $2\frac{1}{4}$" bar knob - for selector switch
6. 1- $1\frac{1}{4}$" bar knob - for ohmmeter adjust
7. 1- 1" x $\frac{1}{4}$"-28 R.H. brass screw - for switch shaft
8. 1- $\frac{1}{4}$" I.D. plate washer - for switch shaft
9. 15- R.H. brass screws 3/8" x 6-32 - for contacts
10. 1- R.H. brass screw $\frac{1}{2}$" x 6-32 - for contact
11. 4- F.H. screws 2" x 10-32 - for jig support
12. 3- R.H. screws $\frac{1}{2}$" x 4-36 - for mounting movement
13. 3- Hex nuts brass 4-36
14. 2- " " " $\frac{1}{4}$"-28
15. 16- " " " 6-32
16. 8- " " " 10-32
17. 2- Pieces spring bronze #22 or #24 B&S (may use galvanized sheet #22 USS.) See details shaft contactor and switch arm.
18. Small quantity of small size insulated copper wire. See resistor details.
19. 1- 1000 ohms carbon resistor
20. 1- 10,000 ohms carbon resistor
21. 1- 100,000 ohms carbon resistor
22. 1- 500,000 ohms 1 W carbon resistor
23. 3- carbon resistors - more than 2000 ohms each. See resistor details.
24. 2- Soldering lugs for movement terminals
25. 2' hook-up wire
26. 1- Single terminal tie point
27. 12- Soldering lugs for 6-32 screws
28. Solder
29. #00 Sandpaper

Procedure:

A. Make switch arm and shaft contacts.

1. Trace templates in Figs. 22 and 23 by placing thin sheet of paper over figure and making outline of the part on the paper.

2. Lay-out metal to size and shape required from template.

3. Drill, cut and bend metal as specified.

B. Layout jig - The "jig" or "mounting board" is made to hold the panel in position both for working on the panel, and for mounting it for temporary use.

4. Trace template in Fig. 25.

5. Cut board for mounting jig.

6. Layout from the template in each corner of the board, the mark for the 3/16" hole indicated. Other holes are not needed for the mounting jig.

7. Drill and countersink these four holes.

C. Layout and drill panel

8. Cut and lay-out panel according to template specification prepared in Step 4.

9. Drill holes as specified.

D. Assemble panel - See Fig. 26.

10. Install contact screws and tie points and secure in place with nuts. Check lay-out of back of board carefully. See Fig. 27. $\frac{1}{2}$" R.H. 6-32 screw should be installed on panel as indicated.

11. Assemble and install switch shaft on panel. See Fig. 24.

12. Mount other units (except milliammeter) on panel.

13. Mount the four 10-32 screws in corners of working jig and tighten nuts as shown in Fig. 34.

14. Place the second nut on each screw and turn down about $\frac{1}{2}$" from top. See Fig. 34.

15. Place panel face down on these screws and adjust nuts to provide level support.

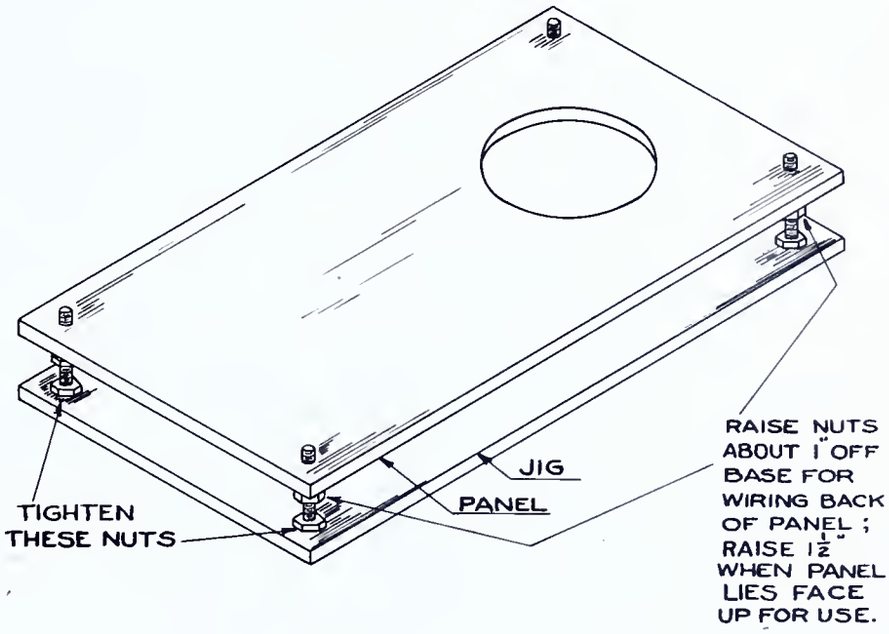

"USE OF JIG"
FIG.- 34

E. Construct Resistors

16. Prepare resistors A, B and C according to specification chart. Label each resistor.

Consult instructor for resistance of movement.

Make these three resistors as follows:

a. Select a size of insulated copper wire depending upon resistor detail specification, resistance of movement and wire sizes available.

b. Remove insulation from end of wire, using #00 sandpaper.

c. Twist bare wire around lead to resistor so that long end of wire is next to body of resistor. See Fig. 35.

d. Solder this twisted connection on resistor lead wire.

e. Measure from soldered connection the specified length and make a sharp bend in the wire to provide a mark.

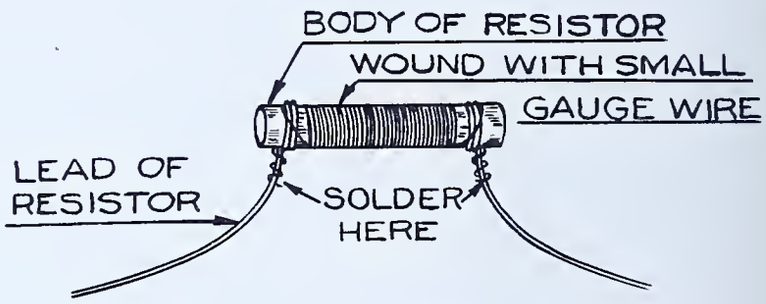

FIG.-35

f. Cut off wire one inch beyond "mark".

g. Wrap the wire evenly on the resistor form in as few layers as possible with the winding ending at the other end of resistor form.

Note: Wrap the wire on the resistor form so that the wire is spread out over the whole surface and that the ending of winding is at the other end from the start. Do not attempt to run wire lengthwise on resistor, but wind around resistor. See Fig. 35.

h. Remove the insulation from the wire between the marked point and the end.

i. Twist bare wire around lead of the resistor so that the marked point is next to body of resistor.

j. Solder this connection on resistor lead wire.

k. Label resistor with proper designation (A, B or C).

l. Repeat with each of the other two special resistors.

F. Wire Units

17. Wire units according to progressive wiring charts. See Figs. 29 to 32.

18. Lift panel from jig, install milliammeter and replace panel in jig (face down).

G. Inspect

19. Inspect soldering, remove loose soldering and any accidental electrical contacts.

20. Check wiring with Fig. 33.

21. Have instructor inspect completed job.

22. Reverse panel and secure in place, mounting with nuts on the corner mounting screws.

H. Use

23. See Job 7 - Voltage Reading by Use of the Multimeter.

24. See Job 8 - Resistance and Continuity Checking with the Ohmmeter.

QUESTIONS

Place the answers to these questions in your notebook or on form as directed by instructor.

1. How many independent magnetic actions are there in the instrument?

2. What is the purpose of the coil?

3. How is the coil mounted?

4. What kind of magnetism is set up in the coil?

5. What is the purpose of the springs?

6. What happens if excessive current is permitted to flow in a meter?

7. What would be the effect on the readings if the permanent magnet were weakened in some manner?

8. (a) What is the name of the resistor that changes the basic movement into a voltmeter?

   (b) How is it connected? Why?

9. (a) What is the name of the resistor that changes the range of a milliammeter?

   (b) How is it connected? Why?

10. In what way do ohmmeter scale graduations vary from voltage scale graduations?

11. How may the range of the series type ohmmeter be changed to higher values?

12. How may the range of the series type ohmmeter be changed to lower values?

13. How is zero deflection adjusted?

14. What would happen if the zero deflection adjustment were not correctly made?

15. Where is the shunt or multiplier usually placed in connection with a single range instrument?

16. Why is an ohmmeter zero adjustment provided?

17. What should be used to turn the zero deflection adjustment screw?

18. What may happen if the ohmmeter adjustment resistor is incorrectly adjusted?

19. What is the purpose of the dry cell in the ohmmeter circuit?

20. How is the sensitivity of a meter described?

21. What may happen if the switch contacts are not well made

    (a) to the switch arm?
    (b) to the contact points?

22. Why were different lengths and sizes of copper wire used for the shunts?

23. Would the resistance value of the resistor used for the shunt form be important? Why?

24. What is the purpose of a tie point?

25. What effect does the lowering of the resistance of a coil have on the current flow in it?

26. Draw a schematic diagram of the multimeter constructed in this unit and outline the circuit of (1) voltmeter, (2) ohmmeter, and (3) milliammeter. Use pencils of different colors, (or various types of lines) to show these.

27. Read and record in your notebook the instrument indications on the following page.

References:

Ghirardi, A. A., Radio Physics Course (Second Edition), pp. 271-323.

Timbie, W. H., Elements of Electricity (Third Edition), Chaps. I and IV.

Watson, Welsh and Eby, Understanding Radio, pp. 59-60, 71, 96-115.

The Radio Amateur's Handbook (Any Edition), A.R.R.L., Chapter on Measurements.

The Radio Handbook (Any Edition), Editors and Engineers, Chapter on Test and Measuring Equipment.

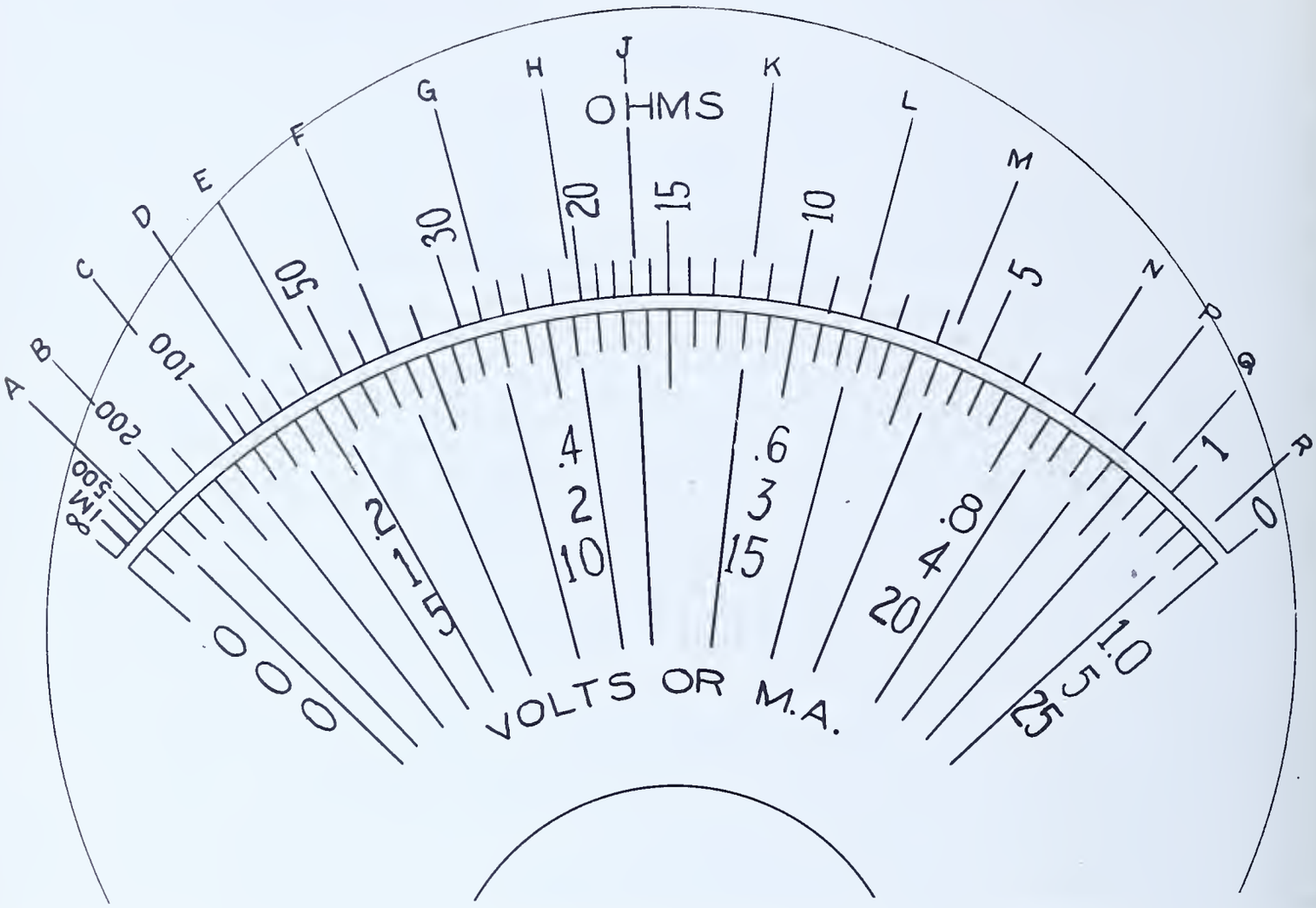

DEFLECTION	RANGE SWITCH SET TO							
	10 V	100 V	500 V	1 MA	5 MA	25 MA	Ohms x 1	Ohms x 100
A								
B								
C								
D								
E								
F								
G								
H								
J								
K								
L								
M								
N								
P								
Q								
R								

DO NOT WRITE IN THIS CHART

COPY FORM IN NOTEBOOK

TABLE I
Pointer Deflections

Copy this form in your notebook and fill in the readings indicated by letters.

JOB 7

VOLTAGE READING BY USE OF THE MULTIMETER

Practice in the use of instruments is necessary because of the importance of the measurements thus obtained and the serious situation involved in replacing movements damaged or "burned out" by uninformed or careless use. This job involves the voltmeter function of any commercial multimeter or voltmeter. The multimeter constructed in Job 6 can be used for this purpose.

THE USE OF THE VOLTMETER

General Information:

When servicing defective equipment the first consideration is to locate the actual source of trouble. Equipment out of order will usually cause a change of the voltages in the defective portion of the circuit.

Measurements made with the voltmeter quickly determine these points and the instrument is therefore a valuable aid in servicing radio equipment.

Polarity

The d-c voltmeter uses a red test lead and prod for the positive terminal and a black lead and prod for the negative.

In using the instrument be sure that the red prod is applied to the positive side of the circuit and the black prod to the negative. Reversal will tend to deflect the indicator needle back off the scale. Polarity may therefore be ascertained by use of the voltmeter, by noticing direction of swing of the indicator.

The following diagram and table illustrates the method of connecting the voltmeter leads for proper polarity. Note that the tested point closer to the positive side of the supply is contacted to the positive (red) prod.

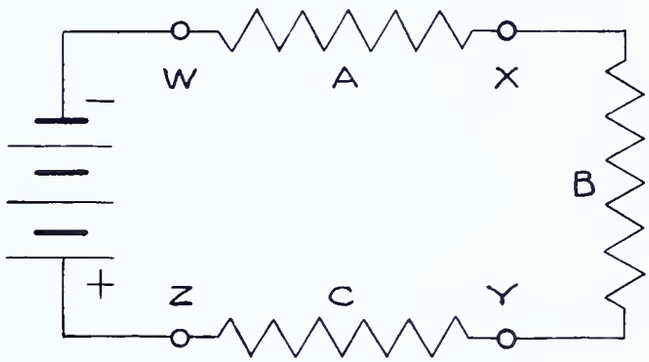

FIG. 1

Table 1 shows the location of test prods when measuring the voltage across various components of the circuit.

Measurement of voltage across	Table 1 Location of test prods Black - or negative	Red + or positive
Battery	W	Z
Resistor A	W	X
" B	X	Y
" C	Y	Z
" A+B	W	Y
" B+C	X	Z
" A+B+C	W	Z

Because of the wide variation of voltages encountered, voltmeters are furnished with several ranges. Start with the highest range whenever an initial measurement of voltage is to be made. This will help to prevent damage (such as burn-out) of the movement and multipliers because of currents due to excessive voltage.

The range should be selected that will result in the maximum readable deflection of the pointer.

Often the current required for operation of the voltmeter itself will change the actual voltage in the circuit whenever the voltmeter is connected. This effect will be more pronounced in circuits having high resistance elements and may be reduced by the use of voltmeters of very high sensitivity, such as a 20,000 ohms per volt movement. Thus the voltmeter current is reduced and the voltmeter resistance is increased.

The sensitivity of a voltmeter movement is commonly expressed in one of two ways (1) the current required for full scale deflection, e.g., a "1 mil movement," or a "50 microampere movement" or, (2) the total resistance in the instrument circuit for each volt of the range of the instrument. This latter method is based upon Ohm's law which states that

$$\text{Resistance} = \frac{\text{Voltage}}{\text{Current}}$$

The ohms per volt sensitivity may be determined by dividing one volt by the full scale current in amperes as follows:

In a 1 mil movement the resistance per volt is $\frac{1 \text{ volt}}{.001 \text{ amp.}} = 1000$ ohms; thus the sensitivity is 1000 ohms per volt.

In a movement classified as a 50 microampere movement (1 microampere = .000001 ampere) the resistance per volt = $\frac{1 \text{ volt}}{.000050 \text{ amp.}} = 20{,}000$ ohms and the sensitivity is 20,000 ohms per volt.

To calculate the total resistance for the range of the instrument use the following rule:

Total resistance = ohms per volt multiplied by the total voltage of the range.

Thus the total resistance of a 1000 ohms per volt movement whose range is 0-100 volts is calculated as follows:

Total resistance = 1000 ohms per volt multiplied by 100 volts = 100,000 ohms.

The direct current voltmeter should not be used on alternating current. The indicator of a responsive instrument may briefly flicker in one direction or the other when the voltmeter circuit is closed or opened. Do not change to lower ranges if such a motion is noted.

Specifications:

Select and use the proper range of multimeter, as instructed under "Procedure," so that a wide variety of voltages may be determined.

Tools needed:

1. Screwdriver
2. Long nose pliers

Equipment needed:

1. Multimeter constructed in Job 6, or any commercial instrument of this type.
2. Power supply

Materials needed:

1. Dry cell, any size.
2. "B" or "C" battery, any size.
3. Test leads.
4. Test board obtained from instructor
5. Resistor, 1-5000 ohms 1 w.
6. Wire, etc.

Procedure:

All readings are to be recorded when taken, in your notebook on a copy of the chart which follows the questions.

1. Set multimeter selector switch to read highest range of voltage.

   Note: When indication is very low, set instrument to next lower range until a readable deflection is obtained.

2. Measure the terminal voltage; i.e., across the terminals, of a dry cell.

3. Set multimeter to read highest range of voltage.

4. Measure the terminal voltage of a "B" or "C" battery.

5. Connect a resistor (about 1000 ohms) across this battery and measure the terminal voltage again.

6. Remove resistor from across battery.

7. Set multimeter to highest range of voltage.

8. Secure test board from instructor. This has six resistors, in series; label as A, B, C, D, E and F.

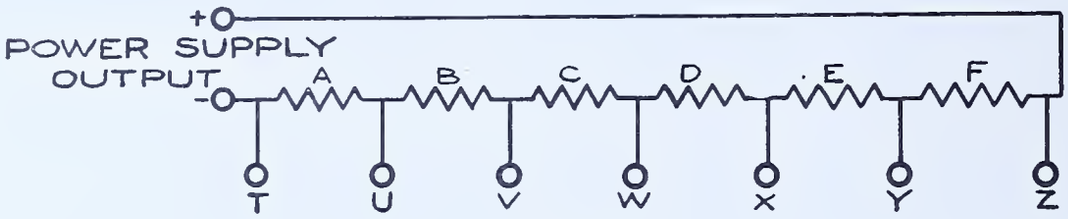

FIG.-2

9. Place this combination across output terminals of a power supply as shown in Fig. 2.

10. Connect power supply input to 105-125v a-c outlet.

11. Turn on power supply.

12. Set multimeter to read highest range of voltage.

13. Measure and record the voltage across each of the values listed on form provided on Question Sheet. Place reading in proper block in copy of form.

14. Place the 5000 ohm resistor across terminals V and X. See Fig. 3. (The 5000 ohm resistor is in "shunt" or parallel to the series wiring of C and D).

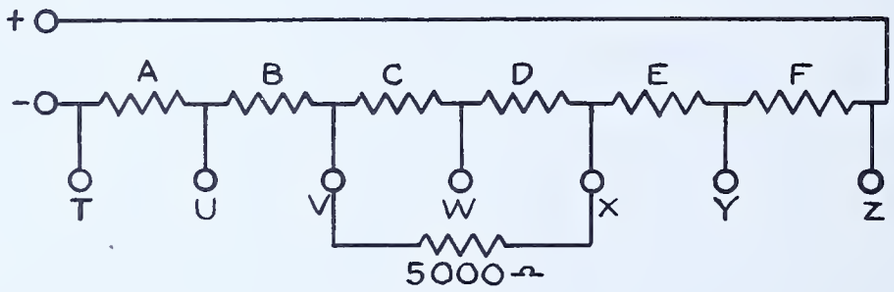

FIG.-3

15. Measure the voltage across the 5000 ohm resistor, across "C"; across "D"; and across the series combination of "C" and "D". Record on copy of tabulation form on Question Sheet.

16. Have results checked by instructor.

17. Determine the voltage across power supply by adding the sum of the voltages across the parts, (A + B + C + D + E + F). Repeat this for the various combinations listed on Question Sheet. Enter results on copy of this form in your notebook.

18. Set multimeter to read highest range of voltage before returning instrument to stock room. This should become a habit when the user is finished with any instrument as one safeguard against damage by excessive voltage.

QUESTIONS

Place the answers to these questions in your notebook or on form as directed by instructor.

1. What is the reason for use of the voltmeter in servicing radios?

2. Why are voltmeters convenient to use?

3. Why are voltmeters made multi-range?

4. Why is an initial voltage measurement made with the multi-range voltmeter set to the highest range?

5. If the zero deflection were not adjusted and the indicator at rest were actually on the scale, would voltage readings be high or low?

6. How may the d-c voltmeter indicate polarity?

7. How may the d-c voltmeter indicate a-c voltage?

8. Did the sum of the voltages equal the power supply output voltage? Explain any discrepancy.

9. The resistance of voltmeter A is 25,000 ohms. Full scale current is one milliampere (0.001 amp). What is full scale voltage?

10. The resistance of voltmeter B is a half megohm (500,000 ohms). Full scale current is fifty microamperes (1 microampere is .000001 ampere). What is full scale voltage?

11. What multiplier in series with voltmeter of question 9 would be required to read one thousand volts (1000v)?

12. What multiplier in series with voltmeter of question 10 would be required to read five hundred volts (500v)?

13. What multiplier would be required to convert a microammeter with a 500 microampere movement to a voltmeter with a range of 0-500 volts?

14. Why should only one hand be used in handling test leads when making voltage measurements?

15. What would be the current in a hundred (100) ohm resistor when twenty-five (25) volts is being measured?

16. In measuring the voltage between T and W in Fig. 4 what would happen to voltmeter reading if resistor:

(a)	A became open?	(h)	D is shorted?
(b)	D becomes open?	(j)	C is shorted?
(c)	C becomes open?	(k)	F is shorted?
(d)	F becomes open?	(l)	terminals T and V short?
(e)	junction E to F opens?	(m)	terminals W and Z short?
(f)	junction B to C opens?	(n)	terminals W and X short?
(g)	A is shorted?		

17. A resistor is placed in series with others across a high voltage supply. A voltmeter is set to lowest range and placed across this resistor. Sketch and explain what would happen to movement if this resistor should become open.

18. Why were the series connections of resistors on the test board soldered?

19. What color is used for the positive test lead?

20. What terminals should be used to measure the voltage across the series combination of "C" and "D"?

21. In Procedure Step 15 what was the difference in voltage between the measurement across the series combination of "C" and "D" and that across the 5000 ohm resistor?

22. In Procedure Step 15 was the sum of the voltages across "C" and across "D" the same as the voltage across the series combination of "C" and "D"?

23. Add the voltage measured across C and D in step 13. Compare it to the voltage measured between V and X across the 5000 ohm resistor in Step 15. What was the effect on the voltage between points V and X when the 5000 ohm shunt was added?

24. A voltage of ten volts is connected across a thousand ohm resistor. What is the current in milliamperes?

25. A voltmeter indicates two hundred volts when placed across a hundred thousand ohm resistor. (a) What is the current through the resistor? (b) What is the current through the voltmeter if the voltmeter resistance is two hundred and fifty thousand ohms? (c) What is the total current supplied to resistor and voltmeter?

26. Three resistors, one of 1400 ohms, one of 2400 ohms, and one of 4000 ohms are connected in series across a 45v supply. What is the current and the voltage across each resistor?

27. Two resistors are connected in series. One is a thousand ohms and a voltage of 22 volts is measured across it. The other is unknown in resistance but has a voltage across it of 121 volts. What is the value of the unknown resistance.

References:

Ghirardi, A. A., Radio Physics Course (Second Edition), pp. 286 - 292.

Timbie, W. H., Elements of Electricity (Third Edition), Chapter 1.

Watson, Welsh and Eby, Understanding Radio, pp. 71, 99 - 115.

The Radio Amateur's Handbook, A. R. R. L., Chapter on Measurements.

The Radio Handbook, Editors and Engineers, Chapter on Test and Measuring Equipment.

TABULATION FORMS

TERMINAL VOLTAGE MEASUREMENTS - Steps 2, 4, and 5

Test	Terminal Voltage
Dry cell, open circuit B or C battery, open circuit B or C battery, 1000 ohm load	DO NOT WRITE IN THIS CHART— COPY FORM

VOLTAGE MEASUREMENTS - Step 13

Test Board #__	Test of voltage across	Testing points		Voltage measured
Example: Power Supply Output		T	Z	117.5 Volts
A				
B				
C				
D				
E				
F				
A + B				
A + B + C				
A + B + C + D				
A + B + C + D + E				
A + B + C + D + E + F				
B + C				
B + C + D				
B + C + D + E				
B + C + D + E + F				
C + D				
C + D + E				
C + D + E + F				
D + E				
D + E + F				
E + F				

DO NOT WRITE IN THIS CHART

COPY FORM IN NOTEBOOK

VOLTAGE MEASUREMENTS - Step 15

Test across	Voltage
Series of "C" and "D" 5000 ohm resistor "C" "D"	

VOLTAGE MEASUREMENTS - Step 17

Test points	Voltage	Test points	Voltage	Test points	Voltage
T U U V V W W X X Y Y Z Total	_____	T U U W W Y Y Z	_____	T V V X X Z	_____
Test points	Voltage	Test points	Voltage	Test points	Voltage
T W W Z Total	_____	T U U Y Y Z	_____	T V V Z	_____
Test points	Voltage	Test points	Voltage	Test points	Voltage
T X X Z Total	_____	T U U Z	_____	T Y Y Z	_____

JOB 8

RESISTANCE AND CONTINUITY CHECKING WITH THE OHMMETER

The ohmmeter is an instrument having wide application in radio work. It is used in radio construction and servicing to inspect or check various components, and to locate faults in circuits under those conditions where the voltmeter cannot be used because power is not applied to the set.

RESISTANCE AND CONTINUITY CHECKING WITH THE OHMMETER

General Information:

THE OHMMETER MUST NEVER BE USED WHEN THE POWER OF THE SET IS ON.

In some cases new parts, and usually all salvaged parts should be checked for their resistance and continuity to avoid the installation of defective components, or those of wrong value into a job. Completed wiring is checked to verify circuit continuity, accidental grounds, and shorts.

The ohmmeter is used for these purposes because it is the most convenient instrument to make such resistance measurements and continuity checks.

In making the resistance checks on the several components the following are looked for in each case:

1. Resistors - are checked to see if their resistance value is as color coded or if they are open, intermittent, or shorted to their shielding case. See resistor color code, Page 169.

2. Coils and Transformers

   a. Single winding air coils - are checked to insure that the winding is continuous.
   b. Air core transformers - are checked to insure that the windings are continuous, and to identify the connections to each winding.
   c. Power transformers - are checked for continuity of windings, identity of connections to each winding, and function of winding. The usual power transformer has three windings that may be identified by their resistance as follows:

      (1) Primary winding - resistance is a few ohms.
      (2) High voltage secondary winding - resistance is a few hundred ohms (usually between 100 and 350 ohms).
      (3) Filament or heater secondary windings - resistance is a fraction of an ohm.
      Transformers usually have more than one filament secondary. These must be identified accurately by a voltage check. Do not attempt this operation without the assistance of the instructor.
      THIS OPERATION IS DANGEROUS BECAUSE OF THE HIGH VOLTAGES POSSIBLE FROM THE SECONDARY WINDING.

d. Audio frequency transformers - are checked for continuity of windings and identity of connections to each winding; they are more frequently referred to by their function than merely as audio transformers. For example: output transformers, driver transformers and interstage transformers. They consist of a primary winding and a secondary winding, either or both of which may be tapped.

The primary or the secondary of an a-f transformer may also be described as single, if the winding is not tapped and made to be connected to a single tube; or push-pull, if the winding is tapped and is made to be connected to 2 tubes.

Some transformers are designed to be used either as single or push-pull and are called universal. The resistance of the windings, both primary and secondary, varies with the particular application. In general the secondary of an output transformer which is made to be connected to the voice coil of a loud speaker has a low resistance.

e. Filter chokes - are checked for resistance. This may vary from approximately fifty ohms to several thousand ohms. If the resistance value is close to the manufacturer's rated value for that choke, it is assumed to be satisfactory.

Note: The manufacturer's name and code number are stamped on the part. Refer to the manufacturer's parts catalog for resistance and other specifications.

The current rating of filter chokes is important in determining the load to be placed on the chokes. However, this does not need to be considered when making a resistance check.

Note: All shielded and unshielded coils and transformers must be checked for shorts (accidental connections) between the windings, and between the windings and shields.

3. Capacitors (Condensers)

a. Air, Paper, and Mica - are checked to determine if they are internally shorted or leaky. (The word "leaky" is defined as a high resistance connection between two points, as opposed to "shorted" which has practically no resistance). For this test the highest resistance range of the ohmmeter must be used. A capacitor in good condition will show an infinite resistance between its terminals.

At the instant the test leads from the ohmmeter are connected to the capacitor, a charging current flows into the capacitor plates. This gradually decreases until it stops flowing as the capacitor becomes fully charged by the ohmmeter battery.

This charging action causes a large initial deflection of the ohmmeter pointer which is gradually reduced until the pointer indicates the actual resistance. This should be very high.

A minimum current flow to overcome the inertia of the instrument and to provide a discernible motion of the ohmmeter pointer is required. The .01 mfd. capacitor is the smallest which will allow this minimum in the usual ohmmeter; however, the electronic type instrument may be actuated by the charging current of a capacitor as small as .001 mfd. The larger the capacitor rating, the greater is the initial current flow, and therefore, the greater the initial pointer deflection.

b. Electrolytic Capacitors - in checking this type, connection polarities must be observed if a true leakage resistance is to be measured; that is, the positive lead on the ohmmeter is connected to the positive terminal on the electrolytic capacitor, and the negative lead to the negative terminal on the electrolytic capacitor.

In making this test, it is normal to find the resistance will vary from 2 megohms to more than 50 megohms for capacitors in good condition. Where the resistance is less than 1 megohm, the capacitor is of doubtful quality.

Note: When an electrolytic capacitor has not been in use for a long period of time it may be necessary to connect it to a d-c voltage for several minutes before tests are made, to allow the dielectric to reform. It is best that this voltage be the rated working voltage of the unit under test but a smaller voltage will be satisfactory for the purpose of this job. This procedure is necessary because of the material of the electrolytic capacitor.

Caution: If a d-c voltage is applied to reform the dielectric, the capacitor must be discharged by connecting a 1000 ohm or higher resistor temporarily across its terminals before making tests.

Just as the paper and mica varieties must be charged during this test, so also must the electrolytic capacitors, and they will also cause the ohmmeter needle to behave in the same way as described in section 3a above. Tuning capacitors are checked for shorts between plates in all positions of the rotor.

4. Continuity Checking - consists of verifying the existence of a continuous electrical path between any two points in a radio as required by the circuit diagram. In making such circuit checks, it is preferred that the test leads of the ohmmeter be held against unsoldered portions of the terminal lugs rather than the soldered portions themselves. In this manner the soldered connections will be included in the continuity check. Use the low resistance range to make these checks. If a portion of the circuit tested includes a high resistance, use an appropriate range of the ohmmeter.

5. Testing for Grounds and Shorts - A ground is an electrical path between any point in the circuit and the chassis. Grounds in the radio may be required by the circuit diagram or may be accidental. A short is an accidental low resistance path between any two points in a circuit. Physical inspection is usually sufficient to discover shorts; although where the parts are hidden to view or shielded, resistance measurements must be made. Because certain grounds and shorts will cause serious damage, it is good practice to check the following three points in particular:

   a. Alternating current connections between the primary of the transformer and ground, or a-c terminals and ground. See Fig. 1.
   b. High Voltage or B+ connections between the ground and: (1) the plates, (2) the screen grids of tubes, and (3) the positive terminals on electrolytic capacitors.
   c. Filament or heater connections between the filament terminals on tube sockets and ground.

   One side only of the filament circuit may be grounded purposely. This fact may be ascertained by referring to the schematic diagram. Fig. 1 shows an example of this type of wiring. See Fig. 1 for points marked (a), (b), (c) which correspond to paragraphs so designated.

A PICTORIAL DIAGRAM OF A TWO TUBE RECEIVER

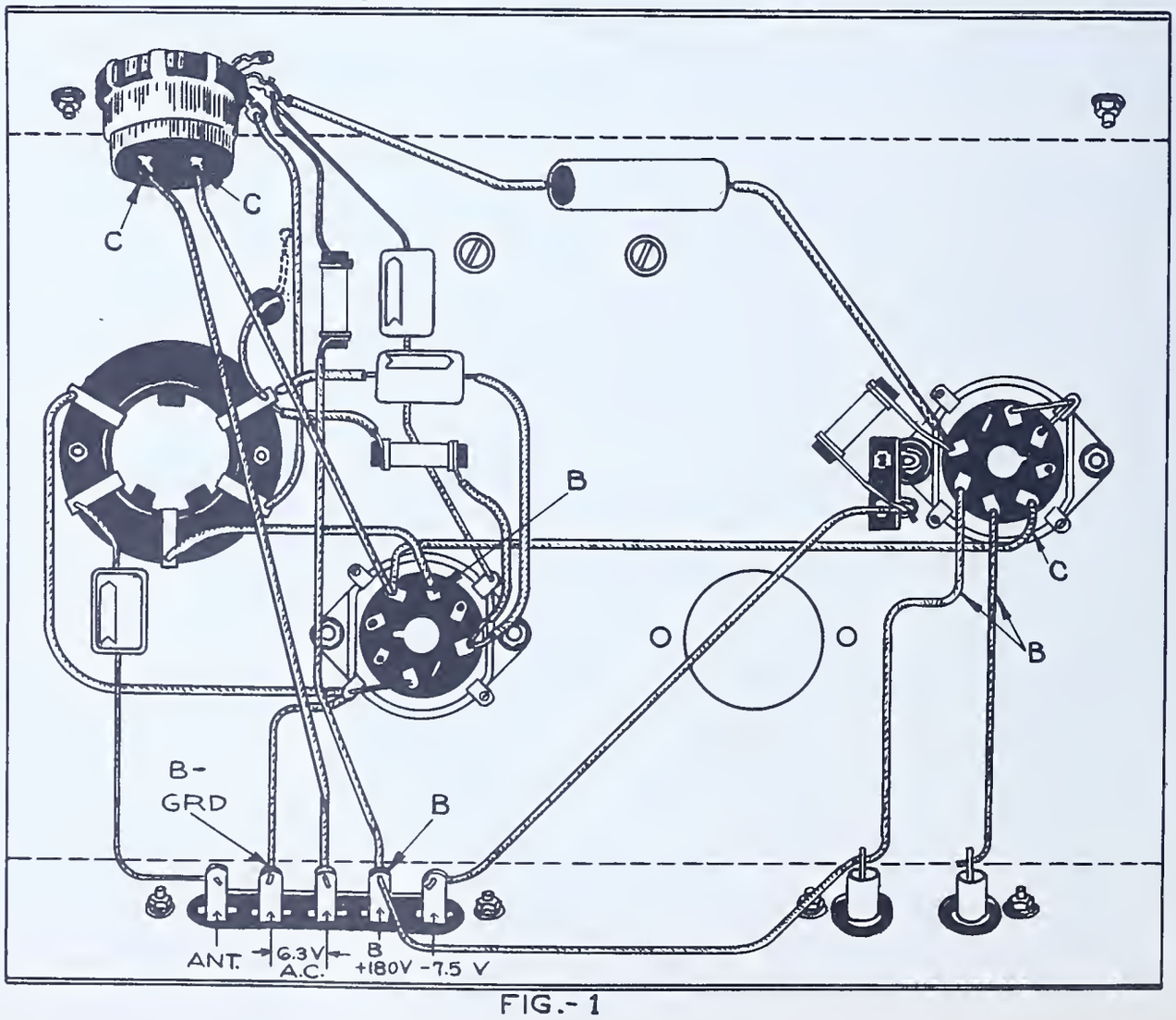

FIG.- 1

Specifications:

1. Check for continuity and resistance, as indicated in the procedure, all the parts provided in the materials list.
2. Record all measurements in the proper copies of tables as directed.
3. Solve the problems and record the answers where indicated, by the methods provided in the sample solutions.

Equipment needed:

1. Ohmmeter with test leads or
2. Multi-meter with test leads and the manufacturer's instruction book for same

Materials:

1. 10 assorted color coded resistors
2. 1 metal clad resistor
3. 1 I-F transformer
4. 1 R-F transformer
5. 1 Power transformer
6. 10 assorted paper capacitors, .001 to .1 mfd., some metal clad
7. 2 different electrolytic capacitors
8. 1 S.P.S.T. toggle switch
9. 1 selector switch, any type
10. 1 volume control
11. 1 old tuning gang
12. 1 output transformer
13. 1 interstage transformer

Procedure: (In General)

1. Obtain equipment and materials from stock room.

2. Number both the resistors and capacitors serially.

3. Study the manufacturer's instruction book on the use of the multimeter or ohmmeter.

4. Familiarize yourself with:

   a. The range switch and the resistance ranges available.
   b. The zero ohms adjuster.
   c. The pin jacks or other methods of connecting the test leads to the ohmmeter connections on the multimeter.

   Note: See reference sheets on multimeter in Job 6. In some cases an external battery is used with the ohmmeter. Check whether the one being used is of that type, If it is, inspect for proper connections between meter and battery. Do not confuse this battery with the one that is normally contained inside the case of the instrument.

A. CARBON RESISTORS

1. Copy form below in your notebook.

Resistors	Color Code Body Stripe 1	Tip Stripe 2	Dot or Stripe 3	Color Code Resistance Value	Ohmmeter Reading	Percentage Variation from Coded Value
1						
2						
8						
9						
10						

2. Select one of the carbon resistors and record its code colors on line (1) in the form prepared under Step 1.

3. Set range switch to the ohms range that includes the approximate value of the resistor to be measured.

4. Connect test leads to ohmmeter, black lead to common or (-) negative terminal, red lead to ohms or (+) positive terminal.

   Note: Some meters have separate jacks or terminals for the low and high resistance ranges.

5. Touch test prods to each other and adjust the meter reading to zero by means of the knob marked "zero ohms adjust" or "zero set". If the setting of the range switch is changed during test, adjustment of zero must be repeated.

   Note: Do not confuse this adjustment with the zero deflection adjustment for the pointer.

6. Place resistor on a non-conducting surface and connect or touch leads firmly with the test prods as in Fig. 2.

   Note: HOLD TEST PRODS BY THE INSULATED PORTIONS WHILE MAKING A RESISTANCE READING. AVOID HOLDING THE METAL PORTION OF THE TEST PROD POINTS BECAUSE BODY RESISTANCE FROM HAND TO HAND WILL AFFECT THE READING CONSIDERABLY.

7. Read value of resistance on the ohmmeter scale and record on form. It is always best to use that range which will provide a reading in the uncrowded portion of the scale.

8. Disconnect test leads and set resistor aside.

9. Test other nine resistors using a separate line in the form for recording each resistor.

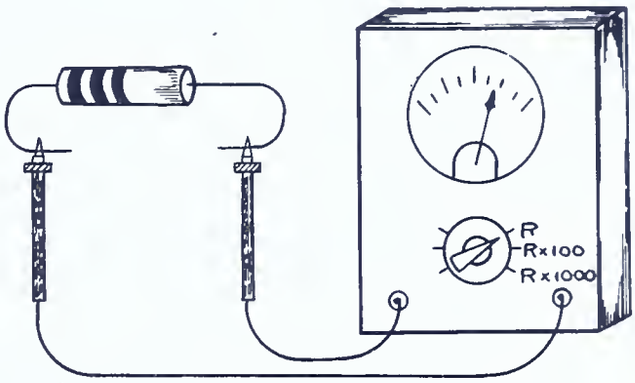

FIG.-2

B. METAL CLAD OR SHIELDED RESISTORS

1. Measure resistance of the metal clad resistor as provided in Steps 3 to 7 inclusive for carbon resistors, Pages 148-149.

2. Place one test prod from ohmmeter on the shield, the other on one of the resistor terminals (see Fig. 3). This will test for short between resistor and shield. Infinite resistance will be indicated between these two points in a good resistor.

3. Record in your notebook the resistance measured and the result of the short check.

4. If resistor has taps, measure resistance between taps and record on a schematic diagram in your notebook.

5. Disconnect test prods and put resistor aside.

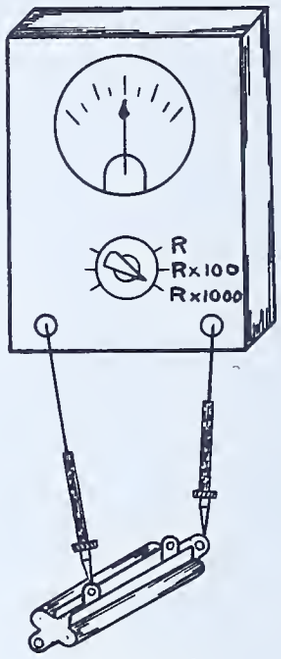

FIG.-3

C. CAPACITORS

Note: The ohmmeter does not measure capacity and therefore cannot take the place of the capacitor checker.

1. Copy form below in your notebook.

Capacitor No.	Capacity Rating	Charging Current Pointer Deflection		Leaky	Shorted	Shorted or Leaky to case
		Yes	No			
1						
2						
9						
10						

2. Select one of the paper capacitors.

3. Set switch to highest resistance range on ohmmeter.

4. Readjust zero ohms adjuster.

5. Connect one test prod to one terminal of the capacitor, then connect the other test prod to the other terminal. Watch for a charging current indication on the meter; i.e., a slight momentary deflection at the instant the second test prod makes contact. See Fig. 4. Capacitor specifications are printed or color coded on the case.

   (1) A capacitor greater than .01 mfd. capacity will show a momentary "charging current" deflection with the usual ohmmeter. This merely indicates that the capacitor is not open and that it is not shorted.

   (2) To apply the test for "open" to capacitors between .01 mfd. and .001 mfd. the electronic type instrument must be used.

   (3) If no charging current is indicated, the capacitor is probably open.

   (4) If the capacitor is too small to provide a charging current it is impossible to determine by this test whether the capacitor is open or not.

   (5) If the ohmmeter indicates very little resistance between the capacitor terminals, it is said to be shorted. If the ohmmeter shows a high resistance between its terminals, the capacitor is said to be leaky.

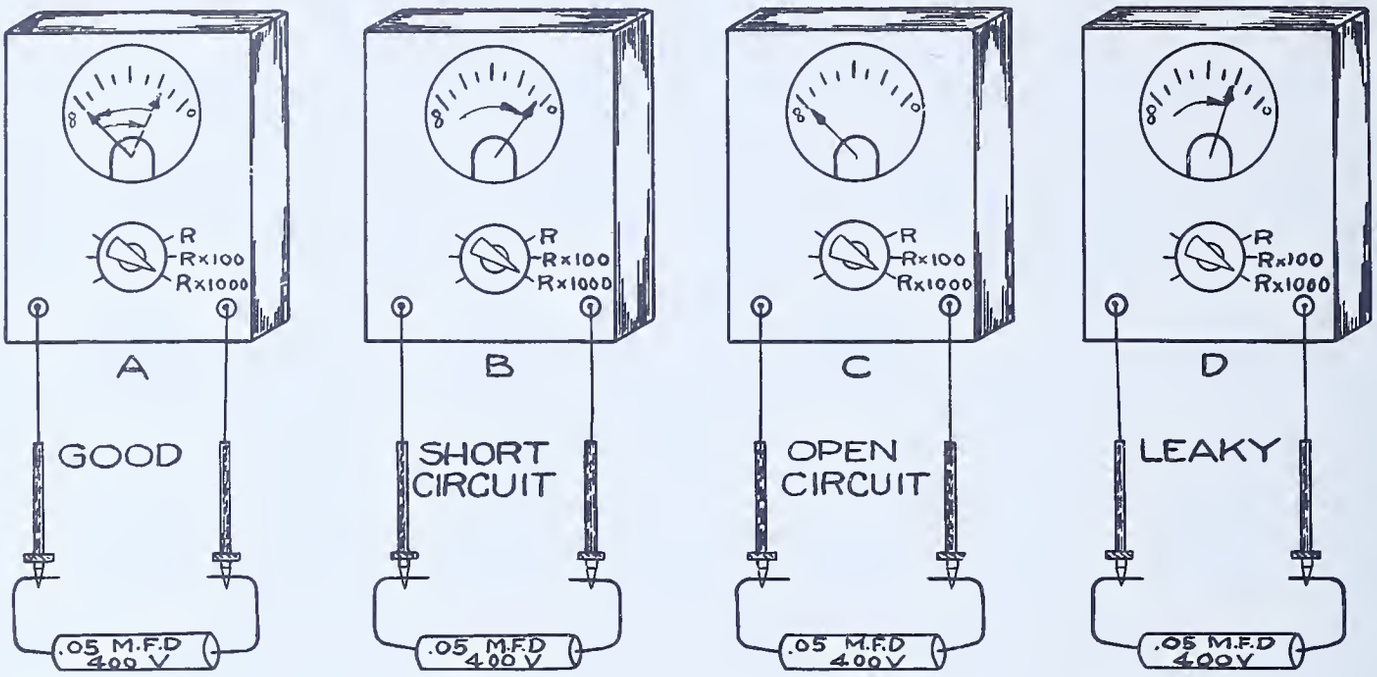

FIG.-4

6. If the capacitor has a metal case, in addition to Step 5, remove one test prod from one terminal and place it against metal shield to test for shorted or leaky condition between capacitor and shield. See Fig. 5.

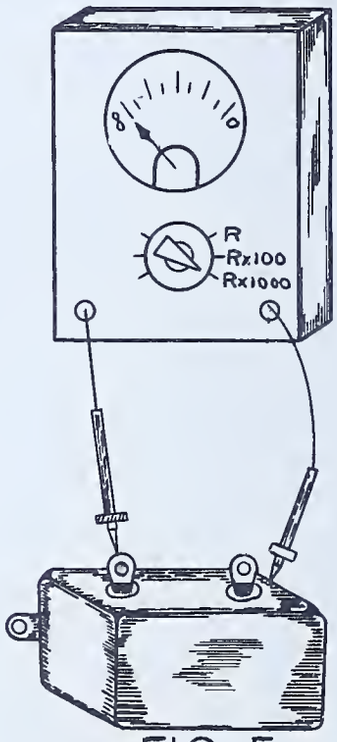

FIG.-5

7. Repeat Step 6 with other terminal of capacitor.

8. Record information called for in form prepared in Step 1 as follows:

   (a) Capacity rating - copy information on case of capacitors.

   (b) Charging current pointer deflection - place check mark in column "Yes" or "No".

   (c) Leaky - record resistance reading on ohmmeter.

   (d) Shorted - place check mark in this column if capacitor is shorted; otherwise leave blank.

   (e) Shorted to case - place check mark also in this column if capacitor is shorted to case; otherwise leave blank.

9. Repeat procedures 5 to 8 for the other nine paper capacitors.

D. ELECTROLYTIC CAPACITORS

1. Copy form below in your notebook.

Electrolytic Capacitor No.	Capacity Rating	Voltage Rating	Leakage Resistance	Capacitor Condition		
				Good	Doubtful	Bad
1						
2						

2. Choose one of the electrolytic capacitors and connect the positive lead from the ohmmeter to the positive lead from the electrolytic.

   Note: Electrolytic capacitors have polarity which must be observed in this test. This polarity is indicated on the case by the manufacturer. Red leads are positive and black leads are negative. The metal case is usually negative when it is used as a terminal.

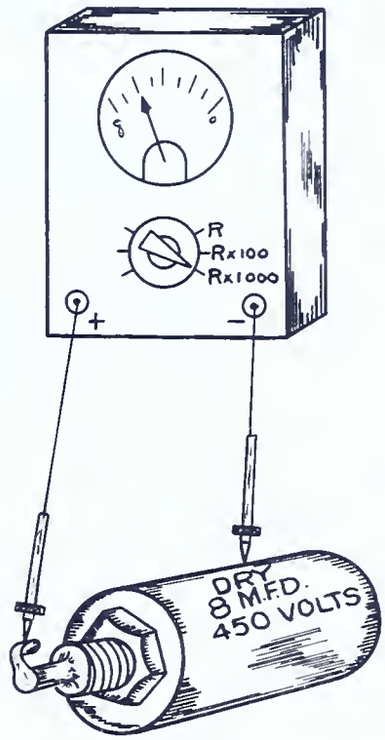

FIG.-6

3. Connect negative lead to the negative terminal and note charging action. This should be a gradual motion of the pointer from the low end to the high end of the resistance scale after an initial rapid deflection to the low resistance end of the scale. The larger the capacity, the longer is the charging time.

4. Record resistance reading of ohmmeter when the pointer stops its motion. This is the leakage resistance.

5. Reverse connections from ohmmeter to capacitor and note the low resistance reading obtained.

   THIS IS THE WRONG METHOD OF TESTING - ALWAYS CHECK POLARITIES ON OHMMETER AND THE ELECTROLYTIC CAPACITOR TO AVOID THIS ERRONEOUS RESULT.

6. Record information in copy of form prepared in Step 1. Judge quality, good, doubtful or bad, on basis of information provided with this job, under paragraph 3 B, Page 145.

7. Repeat steps 2 to 6 for other electrolytic capacitor.

E. SWITCHES

Part A. Toggle Switches

1. Select toggle switch.

2. Connect test leads from ohmmeter to terminals of switch. Use low resistance range. See Fig. 7A.

3. Open and close switch several times and check with ohmmeter for zero ohms reading each time switch is closed and an infinite reading when switch is open.

4. Shake arm of switch back and forth while in closed position and watch ohmmeter pointer for irregular motion.

   Note: ANY ERRATIC MOTION OF POINTER INDICATES POOR SWITCH CONTACTS.

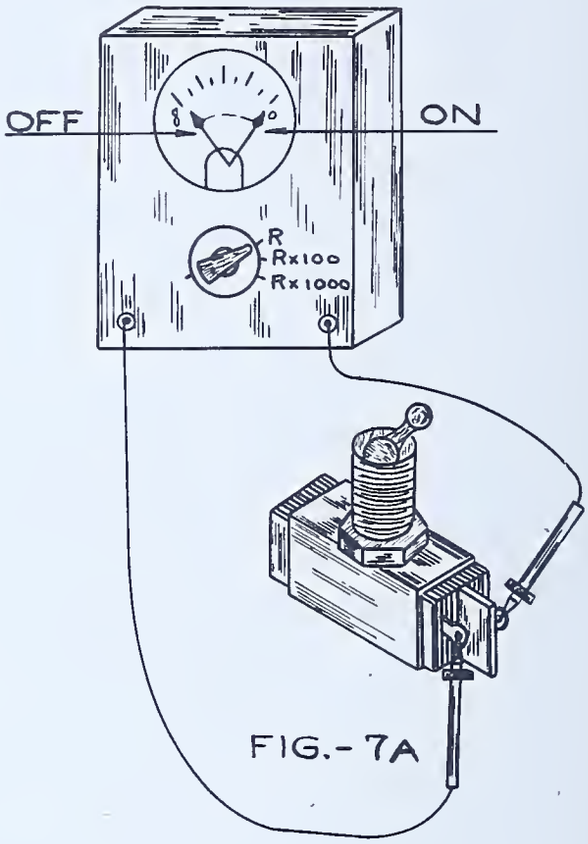

FIG.- 7A

Part B. Selector Switches

Selector or band switches consist of one or more sections (decks or gangs) on which one or more independent switches are mounted.

Each switch consists of an arm or common contact with one or more additional contacts. A circuit can be completed between the arm and each of the separate contacts of the switch by the rotation of the switch shaft. See Fig. 7B.

By means of this type of switch any number of independent circuits may be closed, opened, or shorted simultaneously.

Contacts in these switches become dirty and noisy in operation quite frequently. To clean them use a soft fiber brush dipped in carbon tetrachloride.

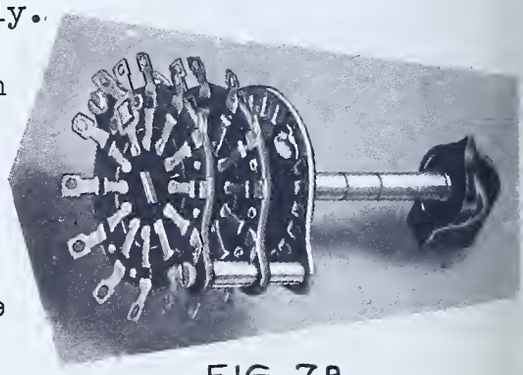
FIG. 7B

To test a selector switch do the following:

1. Inspect visually each section or deck of the selector switch to determine:

   (a) the position of the arm and its several contact points for each switch mounted on the section;

(b) the position of the selector switch shaft which seems to complete the circuit between the arm of a switch and its several contacts.

(c) if particles of solder or other materials are lodged between parts of selector switch, remove such particles with a pick.

Note: There may be more than one electrically independent switch on each deck.

2. Set ohmmeter to its low resistance range.

3. Place one test prod from the ohmmeter on the arm of the switch being tested, and the other test prod on one of the contacts of that switch.

4. Rotate switch shaft to position in which the circuit being tested should be closed as determined by the visual inspection made in Step 2.

5. If circuit does not close, clean contacts as explained above and repeat Step 4.

6. If circuit is not closed and contacts have been cleaned it is better to replace the switch then to attempt bending contactors or replacing wiping contacts.

7. Repeat for other contacts of the same switch on the same "deck" or section.

8. Repeat for other switches on that "deck" and the other decks of the selector switch.

F. VOLUME CONTROL

1. Select volume control and connect test leads to outside terminals. See Fig. 8.

2. Measure resistance between these outside terminals. This is known as the resistance rating of the control, (the maximum resistance reading obtained).

3. Connect test leads to volume control as in Fig. 9.

4. Slowly rotate shaft of control from extreme clockwise to extreme counter-clockwise position and observe carefully the motion of the pointer of the ohmmeter. This motion should be smooth and constant in one direction. Any erratic motion of the pointer indicates a faulty control which would be noisy in operation in a set. This test will not select all such controls.

5. Record in your notebook the resistance rating of the control measured and the results of your observation in Step 4.

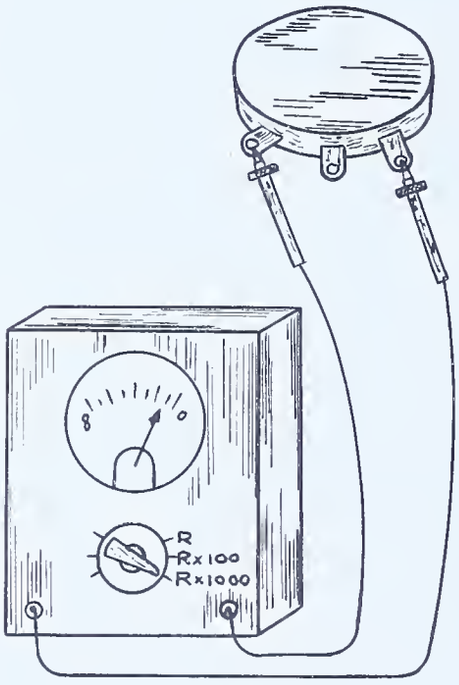

FIG.-8

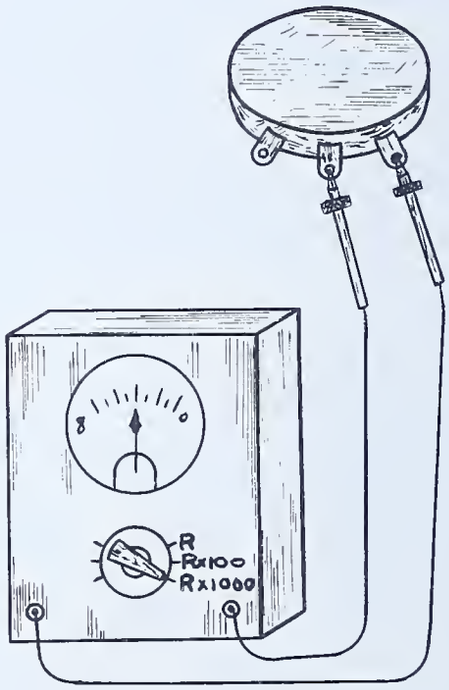

FIG.-9

G. I-F TRANSFORMER

1. Select i-f transformer.

   Note: An i-f transformer consists of two separate windings of wire on a form, with the leads brought out separately. See Fig. 10. This basic transformer may be mounted in a shield can, together with trimmer capacitors, automatic volume control (AVC) resistors, and capacitors.

2. When the i-f transformer is mounted in a shield, ascertain by inspection or by removal from shield whether additional components are mounted inside shield.

3. Connect test leads to terminals to which wires from one winding of the i-f transformer are terminated. If leads are connected to terminals include them in test by connecting test leads as in Fig. 10.

4. Use low resistance range of ohmmeter to make continuity and resistance check and record observation in notebook.

5. Repeat Steps 3 and 4 for other winding.

6. If AVC components (resistors and capacitors) must be checked, use procedures described before for capacitors and resistors.

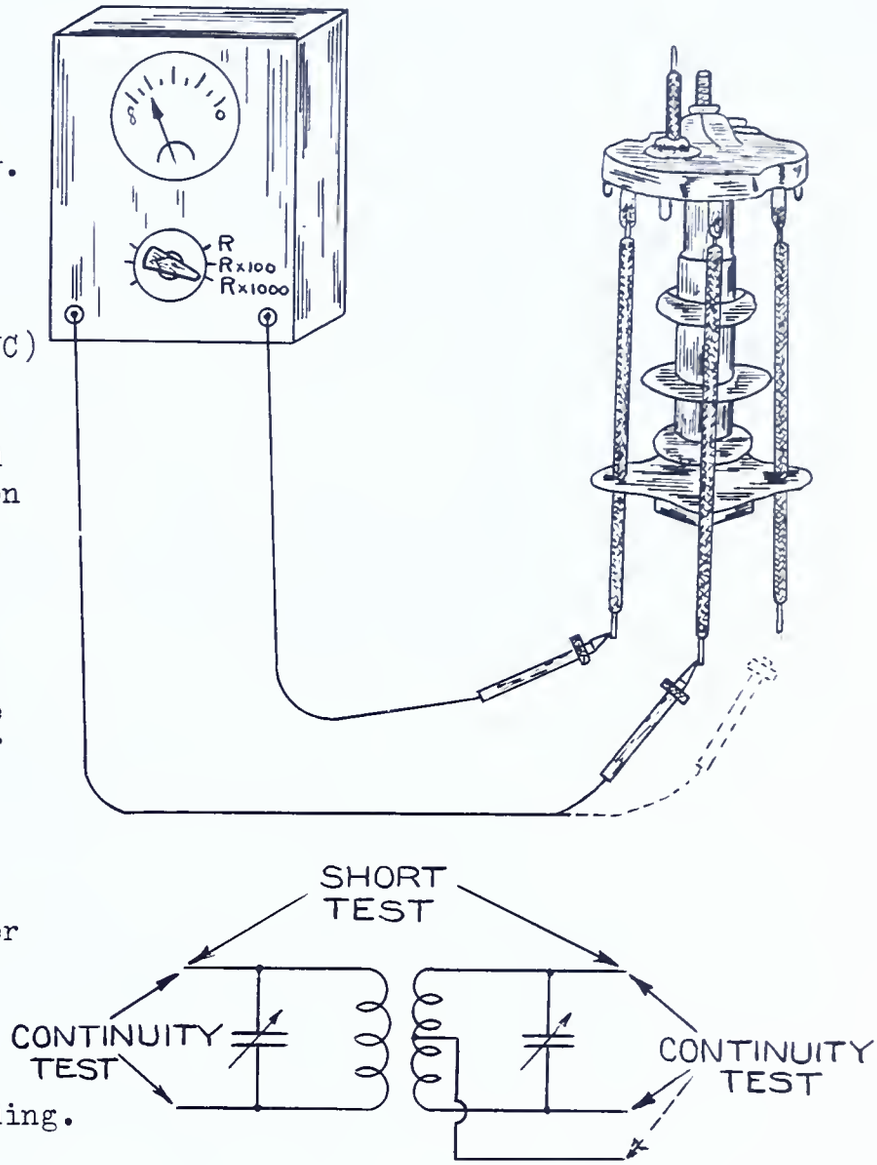

FIG.-10

7. Ascertain connections of one winding to its trimmer.

8. Connect test leads of ohmmeter to terminals on this trimmer.

9. Observe resistance reading on low range.

10. Slowly turn trimmer screw to close trimmer. Use small screw driver and avoid forcing screw.

11. Watch pointer of ohmmeter for sudden changes in resistance. This indicates shorting between plates of trimmer, and usually means that the mica is broken or missing.

12. Record results observed in Steps 10 and 11.

H. R-F TRANSFORMER

1. Select r-f transformer.

   Note: An r-f transformer consists of two or more separate windings of wire with the leads brough out separately or terminated on lugs on the supporting coil form. See Fig. 11. The transformer may be mounted in a shield.

2. Make sketch of base of coil to include mounting position and the proper number of lugs and wires extending out of the coil shield. If wires are colored, name colors in sketch.

3. Connect one test lead to one of the wire ends or lugs on the coil form.

4. Touch the other wire ends or lugs one at a time, to discover between which ones there is continuity. Use low ohmmeter range. Usually windings have two connections, but if they are tapped, continuity will exist between more than two terminals. Compare schematic diagram of coil to results obtained to determine if winding is tapped. This diagram is obtained from manufacturer's catalog.

5. Repeat procedure in Steps 3 and 4, making your connections to the other lugs or wire ends to determine the continuity of other windings.

6. Indicate results of Step 5 in sketch in Step 2.

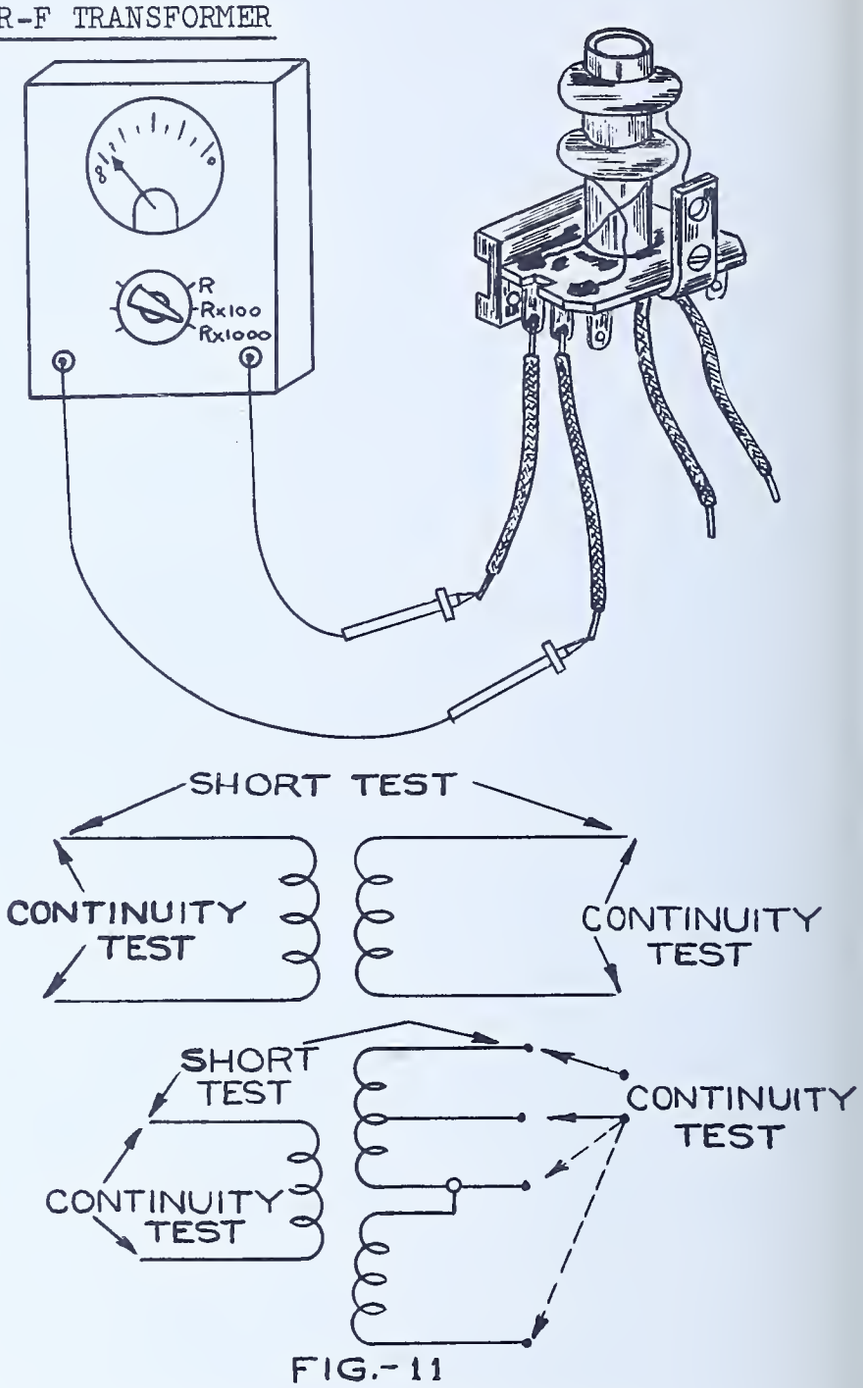

FIG.-11

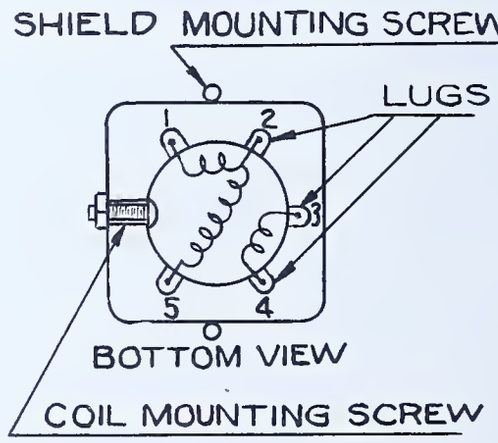

METHOD OF INDICATING WINDINGS BETWEEN LUGS.

FIG.-12

I. POWER TRANSFORMER

1. Select power transformer.

   Note: Review information on power transformers, Page 143.

2. Make sketch of transformer showing position of lugs or place from which wires extend from the transformer, including color of leads or special markings on lugs. Fig. 13.

3. If leads are colored, compare markings to RMA transformer color code, Page 171.

4. Connect leads from ohmmeter to similarly colored wires to determine continuity. Use low resistance range of ohmmeter and note carefully the resistance of each winding.

5. Remove test lead from one end of each of the continuous windings and touch the other wire ends, one at a time, with this test lead to determine the existence of a tap on the winding under test; a tap will show continuity to the ends of its winding.

6. Record on sketch prepared in Step 2 the results of observations made in Steps 4 and 5.

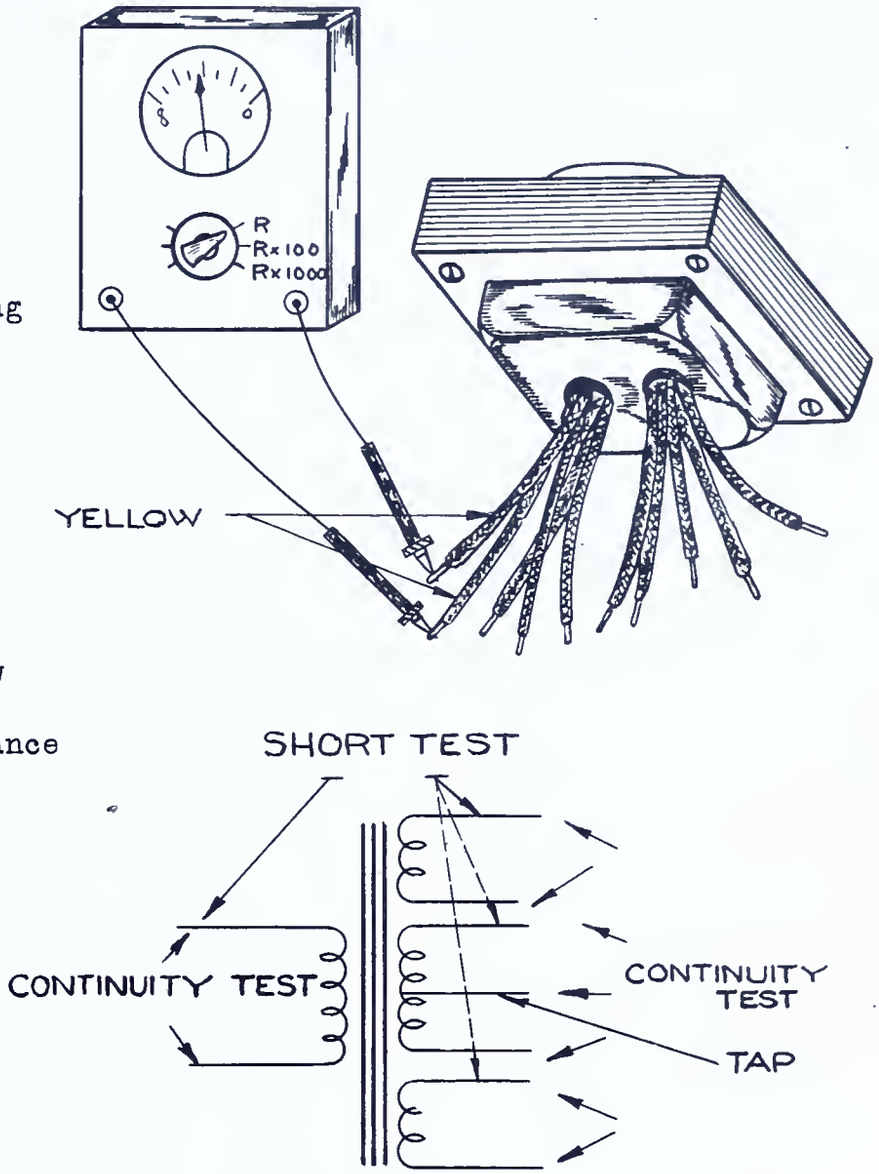

FIG.-13

7. Repeat Steps 4 and 5 to determine the continuity and resistance of other windings.

8. Record the observations obtained in Step 7 on sketch.

   Note: When reading resistance of tapped windings, the larger value is indicated between the outside ends of the windings.

9. Adjust ohmmeter for highest resistance range.

10. Connect one lead from ohmmeter to one of the windings and the other lead to each one of the other windings, one at a time. The ohmmeter reading should be almost infinite.

11. Repeat this procedure for the other windings in all combinations possible. This procedure provides a leakage test (high resistance short) between the windings.

12. Repeat Step 10 between the several windings and the shield of the transformer to determine the existence of a ground.

13. Where transformers have lugs or terminal posts, find the various windings by connecting the test leads to the lugs or posts.

14. Record observations where shorts are indicated on the sketch made in Step 2 of this sheet.

15. Indicate on the sketch the probable high voltage, primary, and heater windings. For method refer to Page 143.

J. AUDIO FREQUENCY TRANSFORMERS

A. Interstage transformers

1. Select interstage transformer. Review information on a-f transformers, Page 144.

2. Make a sketch of the transformer showing position of lugs or place from which wires extend from the transformer. Include color of leads or special marking on lugs. See Fig. 14.

3. If leads are colored compare markings to R.M.A. transformer color code, Page 171, to help determine the windings and their functions.

4a. Connect leads from ohmmeter to primary wires coded or marked B+ and P.

4b. If neither letter markings or color code indicate the windings then connect a single test lead to one wire end or lug and the other test lead to the other wire ends or lugs one at a time to determine the continuity of windings and the existance of a tap. Use the medium or high resistance range of the ohmmeter and record the indicated resistance on the sketch prepared in Step 2. See Fig. 14.

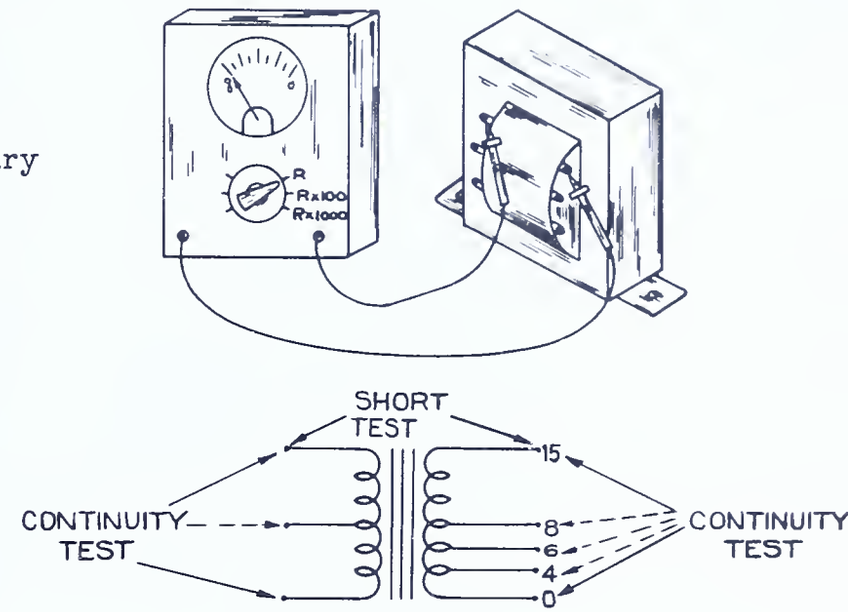

FIG.-14

5. Repeat Step 4 for secondary winding coded or marked G and F; check for taps in each case.

6. Test for a short between windings by connecting one test lead from the ohmmeter to each winding. Use high resistance range of ohmmeter for this test. Indicate a shorted condition on the sketch prepared in Step 2.

7. Check for a short between each winding and the core of transformer as follows: touch one test prod to the iron core and the other test prod to a wire end from each winding one at a time. Use high resistance range of ohmmeter. Indicate a shorted condition between windings and core on sketch prepared in Step 2.

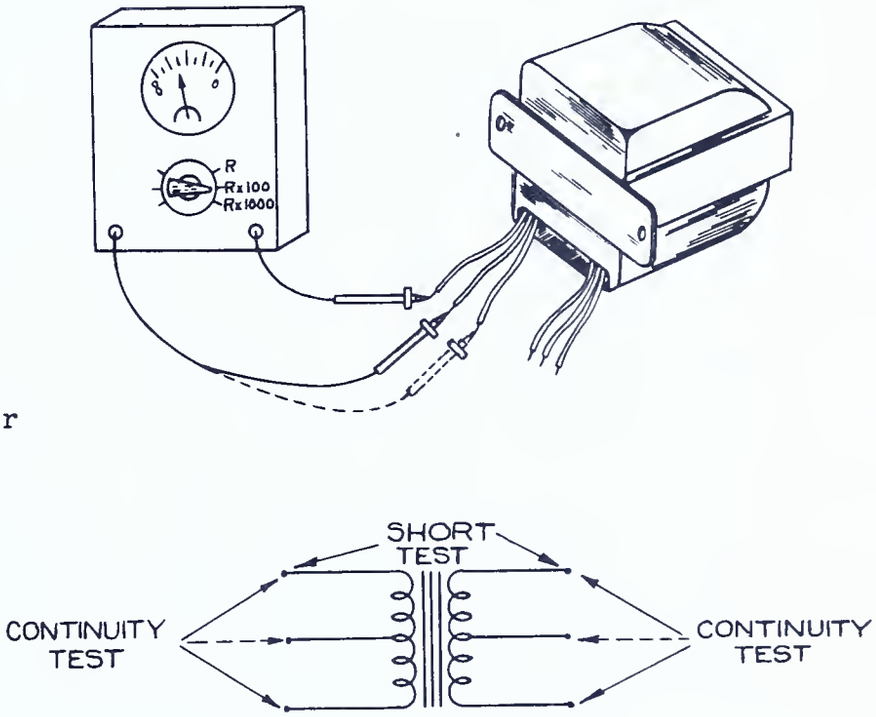

FIG.-15

B. Output Transformers - See Fig. 15.

Repeat all steps of Part A - Interstage transformers.

K. VARIABLE CAPACITORS OR TUNING CONDENSERS

Variable capacitors consist of a stationary portion called the stator, insulated from the frame, and a movable portion called the rotor, mounted in the frame. See Fig. 16. A gang consists of two or more stator sections with the corresponding rotors mounted on a common shaft.

1. Connect or touch one test prod of ohmmeter to the stator and the other test prod to the rotor. See Fig. 16. Use the high resistance range of the ohmmeter.

2. Rotate the rotor slowly from one extreme position to the other and watch carefully for any motion of the pointer. Any reading less than infinity indicates a short of some sort between the plates of the capacitor.

3. Repeat Step 2 for all sections of the gang.

4. The approximate position of the rotor in which the capacitor plates are shorted should be noted if repairs are to be made.

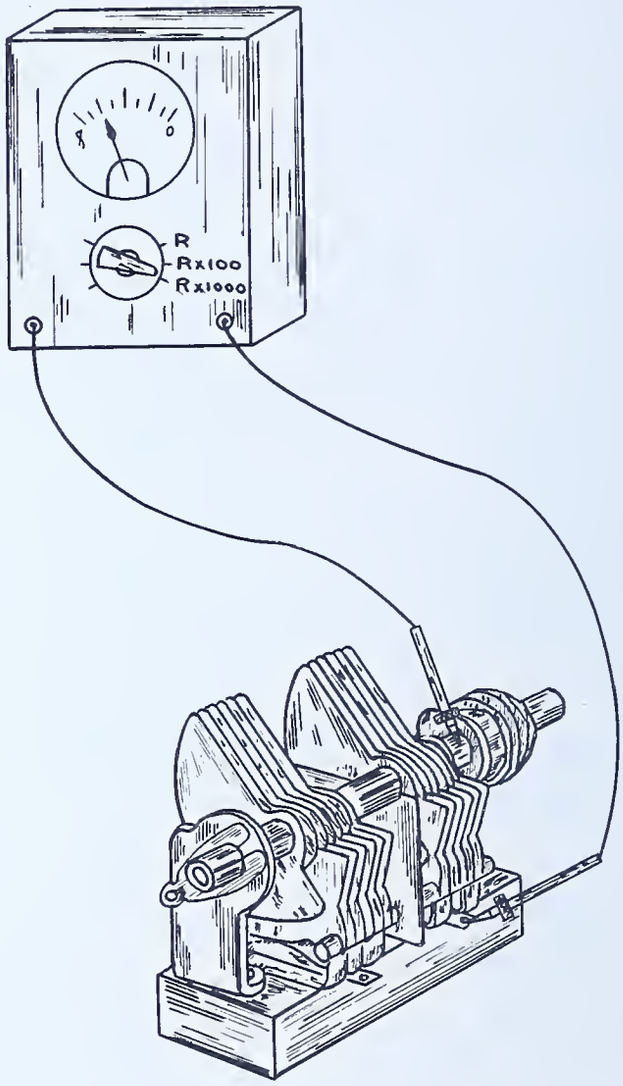

FIG.-16

L. RESISTORS IN SERIES

1. Copy form below in your notebook.

Resistors in Series Combination	Measured resistance value obtained in Part A of this job			Total Ohmmeter res. value	Calculated total resistance
R_1 and R_2	R_1=	R_2=			
R_1 and R_3	R_1=	R_3=			
R_2 and R_3	R_2=	R_3=			
R_1 and R_2 and R_3	R_1=	R_2=	R_3=		
R_4 and R_5 and R_6	R_4=	R_5=	R_6=		

2. Select resistors marked #1 and #2 used in Part A of this job.

3. Connect these two resistors by twisting together one of the leads from each. See Fig. 17.

4. Choose probable ohmmeter range and connect test prods to the free ends of the resistors. See Fig. 17.

   Note: The method of connecting resistors illustrated in Fig. 17 is called a "series combination". The ohmmeter is connected across the ends of this series combination. The word "series" is frequently used instead of "series combination".

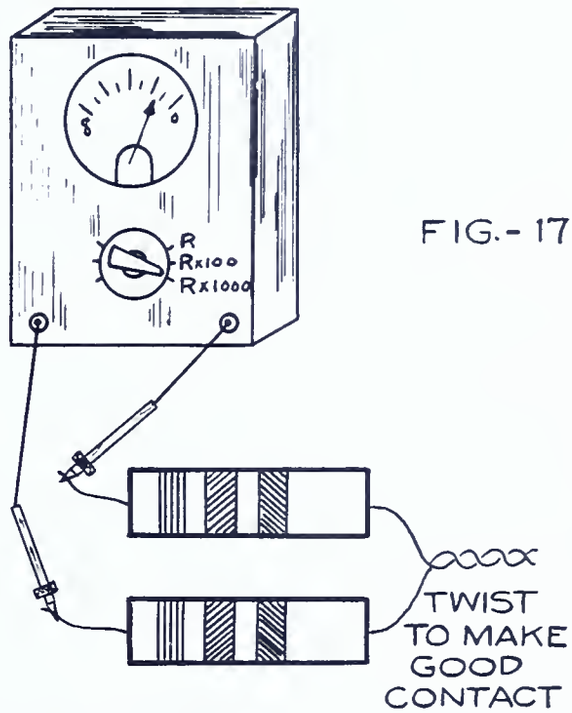

FIG.- 17

5. Measure the total resistance with the ohmmeter and record value in the proper column in form prepared in Step 1.

6. Obtain the measured resistance value of each resistor from the form prepared in Part A of this job. Record this information on the form prepared in Step 1.

7. Refer to the form prepared in Step 1 and repeat Steps 2,3,4, and 5 with the combinations indicated in the form. Fig. 18 illustrates method used in adding a third resistor in series. In like manner additional series resistors may be added.

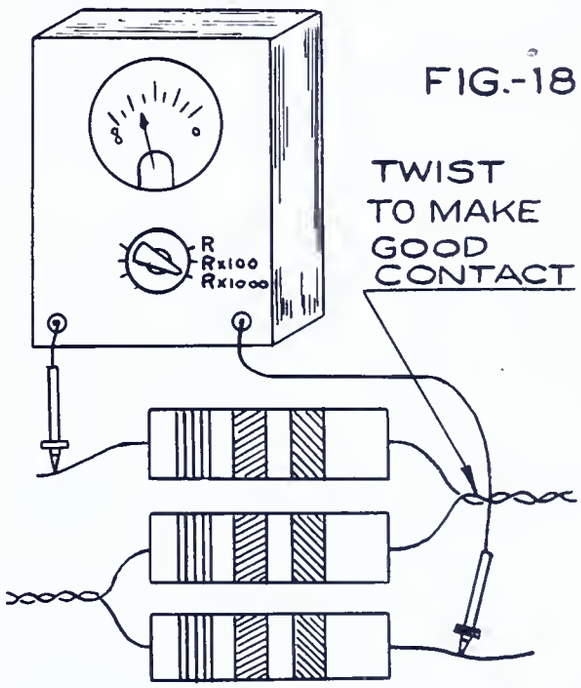

FIG.-18

M. RESISTORS IN PARALLEL

1. Copy form below in your notebook.

Resistors in parallel combination	Measured resistance value obtained in Part A of this job			Total Ohmmeter res. value	Calculated total resistance
R_1 and R_2	R_1=	R_2=			
R_1 and R_3	R_1=	R_3=			
R_2 and R_3	R_2=	R_3=			
R_1 and R_2 and R_3	R_1=	R_2=	R_3=		
R_4 and R_5 and R_6	R_4=	R_5=	R_6=		

2. Select resistors marked #1 and #2.

3. Connect these two resistors by twisting together the leads from each as in Fig. 19.

4. Choose probable ohmmeter range and connect test prods to the resistors as in Fig. 19.

   Note: The method of connecting resistors illustrated in Fig. 19 is called a "parallel combination". The ohmmeter is connected across the ends of the parallel combination. The word "parallel" is frequently used instead of "parallel combination".

   The dotted resistor indicates the method used in adding a third unit to the parallel combination. In like manner, additional units may be added.

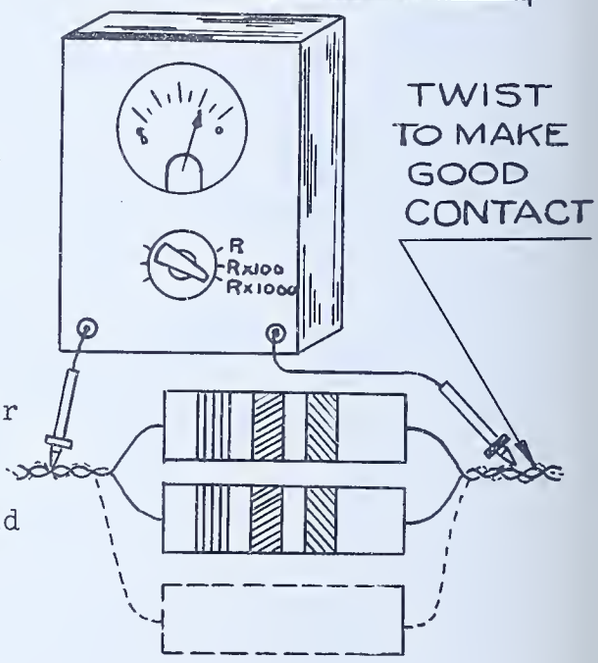

FIG.-19

5. Measure the total resistance with the ohmmeter and record value in the proper column in the form prepared in Step 1.

6. Obtain the measured resistance value of each resistor from the form prepared in Part A of this job. Record this information on the form prepared in Step 1.

7. Refer to form prepared in Step 1, and repeat Steps 2,3,4, and 5 with the combinations indicated in the form.

QUESTIONS

Place the answers to these questions in your notebook or on form as directed by instructor.

1. Why are old parts checked for continuity?

2. Why is the ohmmeter used for continuity checking?

3. What tests are made on a resistor with an ohmmeter?

4. What tests are made on an r-f transformer with an ohmmeter?

5. What is the high resistance winding in a power transformer?

6. What precaution must be taken in checking an electrolytic capacitor with the ohmmeter?

7. Why does an ohmmeter pointer deflect at the instant of contact of the test leads with capacitor terminals? Explain limitations.

8. What is meant by leakage resistance?

9. What test is made with shielded (metal clad) resistors that is not made with the ordinary resistor?

10. What is meant by a ground?

11. What is meant by a leaky capacitor?

12. Which points in particular should be tested for ground in a radio?

13. When changing from one range to another on the ohmmeter what controls must be adjusted?

14. To avoid error how must test leads be held?

15. Determine percentage of variation from coded value for the ten resistors measured in Part A by using the following formula and record a copy of the same form in your notebook:

$$\text{Percentage error} = \frac{\text{Actual Resistance-Coded Resistance}}{\text{Coded Resistance}} \times 100$$

Example: Resistor is coded

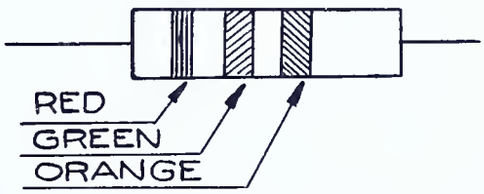

FIG.-20

According to code R = 25000 (ohms)

by measurement Resistance = 24500 ohms

$$\% \text{ error} = \frac{24500 - 25000}{25000} \times 100 = \frac{-500}{25000} \times 100 = \frac{-100}{50} = -2\%$$

16. How may a noisy volume control be checked by an ohmmeter?

17. Between which terminals does the resistance of a volume control vary when the shaft is rotated?

18. How are poor switch contacts detected with the ohmmeter?

19. When checking a volume control in good condition how does the ohmmeter pointer behave?

20. How is a padder or trimmer checked with the ohmmeter? Why is this check necessary?

21. How are the results of an r-f coil continuity check recorded for easy reference?

22. How are variable capacitors or tuning condensers checked for plate shorts?

23. Distinguish between continuity and resistance checking.

24. When a resistance being measured can be checked on two ranges of the ohmmeter, which range is preferred?

25. According to information given which type of ohmmeter will provide an appreciable deflection with the .001 mfd. capacitor?

26. Determine the calculated resistance for the several combinations of series resistors in the form prepared in your notebook in Step 1 of Part K of this job. Use the following formula:

The total Resistance = sum of the separate resistor values in a series combination.

If R_t is the total resistance and R_1, R_2, etc. represent the several resistors in series then

$R_t = R_1 + R_2 + R_3$, etc.

<u>Example:</u> Find the total resistance of two resistors in series, if one is 1260 ohms, and the other is 450 ohms. The total resistance would be $= R_1 + R_2$
$= 1260 + 450 = 1710$ ohms.

27. Determine the calculated resistance for the several combinations of parallel resistors in Part L of this job. Use the following formula:

The reciprocal of the total resistance = the sum of the reciprocals of the several resistors in parallel.

Note: A reciprocal of a number = $\frac{1}{\text{the number}}$

therefore, if R_t = total resistance and R_1, R_2, etc. are the several resistors, then

$$\frac{1}{R_t} = \frac{1}{R_1} + \frac{1}{R_2} + \frac{1}{R_3}, \text{ etc.}$$

Example:

What is the total resistance of three resistors in parallel, one of 4 ohms, one of 3 ohms, one of 6 ohms?

Answer:

Step 1. Formula for resistors in parallel is:

$$\frac{1}{R_t} = \frac{1}{R_1} + \frac{1}{R_2} + \frac{1}{R_3}, \text{ etc.}$$

Let R_1 = 4 ohms, R_2 = 3 ohms, R_3 = 6 ohms

Step 2. Substitute values of R_1, R_2, and R_3 in the above formula.

then $\frac{1}{R_t} = \frac{1}{4} + \frac{1}{3} + \frac{1}{6}$

Step 3. Find the sum of the fractions or decimals on the right side of the equation.

Add

$$\frac{1}{4} = \frac{3}{12} \quad \text{or} \quad .250$$

$$\frac{1}{3} = \frac{4}{12} \quad \text{or} \quad .333$$

$$\frac{1}{6} = \frac{2}{12} \quad \text{or} \quad .167$$

$$\frac{9}{12} \quad \text{or} \quad .750$$

Step 4.

$$\frac{1}{R_t} = \frac{9}{12} \quad \text{or} \quad .75$$

Step 5. Invert both sides of the equation in Step 4

then $\frac{R_t}{1} = \frac{12}{9}$ or $\frac{1}{.75}$

Step 6. $R_t = 1\frac{1}{3}$ ohms = 1.33 ohms

28. The total resistance of a series combination is:

    (a) as great as the largest resistor in the series?
    (b) greater than the largest resistor in the series?
    (c) less than the largest resistor in the series?

    Note: Base your answer on information obtained in Part L of this job.

29. The total resistance of a parallel combination is:

    (a) greater than the smallest resistor?
    (b) smaller than the largest resistor?
    (c) smaller than the smallest resistor?

    Note: Base your answer on information obtained in Part M of this job.

30. If two resistors of equal value are in parallel, the total resistance is:

    (a) half of either?
    (b) one-third of either?
    (c) one-fourth of either?

31. On the basis of information obtained in Part J, which winding of an out-put transformer has the greater resistance?

32. How many wires are connected to the push-pull secondary of a transformer?

33. How many wires are connected to the primary of a transformer which was made to be connected to a single tube?

References:

Ghirardi, A. A., Radio Physics Course (Second Edition), pp. 309-310.

Timbie, W. H., Elements of Electricity (Third Edition), Chapter 4.

Watson, Welsh and Eby, Understanding Radio, pp. 71, 109-129, 359.

The Radio Amateur's Handbook (Any Edition), A. R. R. L., Chapter on Measurements.

The Radio Handbook (Any Edition), Editors and Engineers, Chapter on Test and Measuring Equipment.

RMA RESISTOR COLOR CODE

I

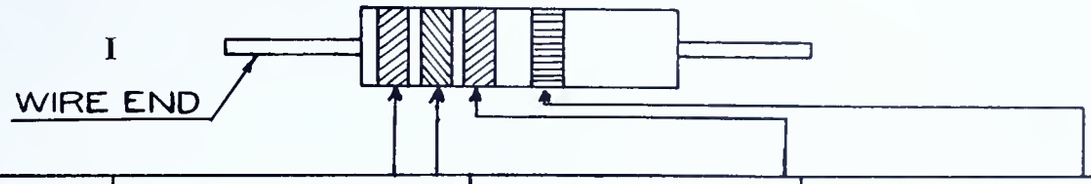

Color of Dot	Significant Figure: Body Color and Tip, or 1st and 2nd stripe	Decimal Multiplier value of Dot or third stripe	% Tolerance 4th stripe or diagonal tip
Black	0	1	
Brown	1	10	
Red	2	100	
Orange	3	1,000	
Yellow	4	10,000	
Green	5	100,000	
Blue	6	1,000,000	
Violet	7	10,000,000	
Gray	8	100,000,000	
White	9	1,000,000,000	
Gold	-	.1	5%
Silver	-	.01	10%
No color	-	-	20%

II

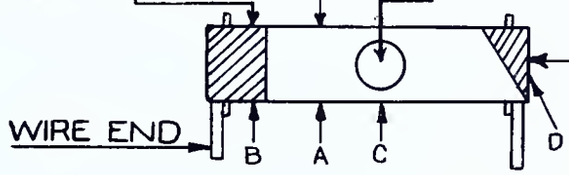

In units marked as in illustration (I) at the top of the page, the first two stripes are the first two significant figures in that order. These two figures are multiplied by the multiplier indicated by the third stripe to secure the resistance in ohms.

A resistor will vary above and below its rated resistance value. This variation is expressed as a percentage tolerance. The color of the fourth stripe indicates this percentage. If this fourth color stripe is missing, unless the percentage tolerance is stamped on the resistor, a 20% tolerance is indicated.

Example:

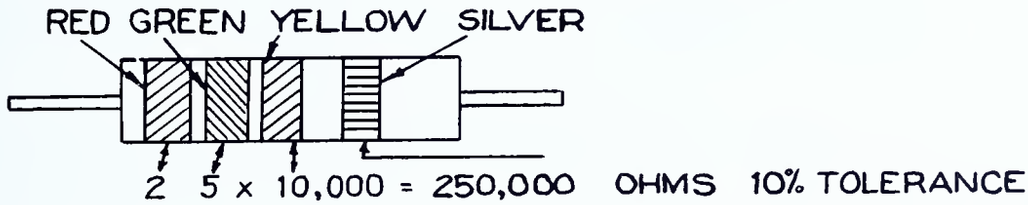

In units marked as in the illustration (II), below the table, the body color (A), and the tip color (B), are the first two significant figures in that order multiplied by the multiplier indicated by the dot color (C) to secure the resistance in ohms. The diagonal color tip indicates percentage tolerance. The absence of color indicates 20% tolerance.

Example:

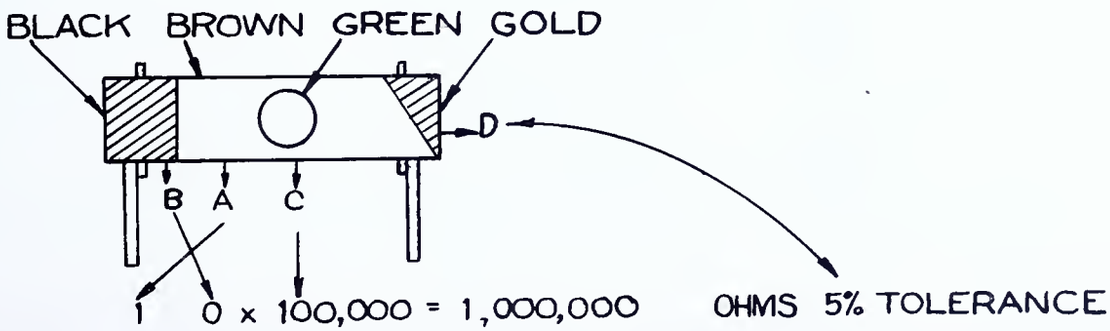

MICA CAPACITOR COLOR CODE

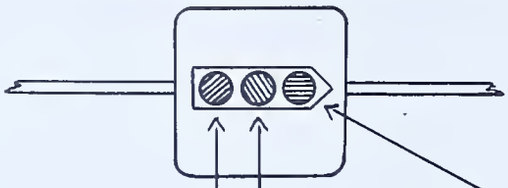

Color of Dot	Voltage Rating	Significant Figure of Dot	Decimal Multiplier	% Tolerance
Black	-	0	1	-
Brown	100	1	10	1%
Red	200	2	100	2%
Orange	300	3	1,000	3%
Yellow	400	4	10,000	4%
Green	500	5	100,000	5%
Blue	600	6	1,000,000	6%
Violet	700	7	10,000,000	7%
Gray	800	8	100,000,000	8%
White	900	9	1,000,000,000	9%
Gold	1,000	-	.1	5%
Silver	2,000	-	.01	10%
No Color	500	-	-	20%

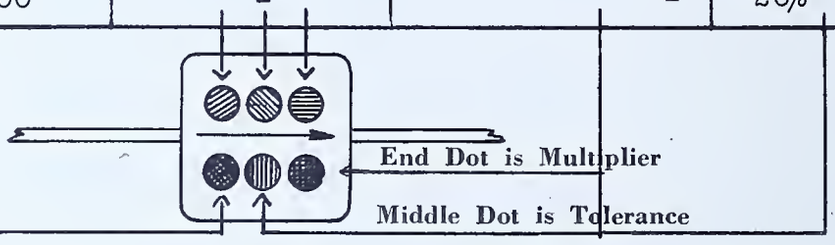

On units marked with three dots, the first two are the significant figures of capacity in mmfd. (micro-microfarad). These two figures are multiplied by the multiplier indicated by the third dot. Voltage rating is stamped into the bakelite.

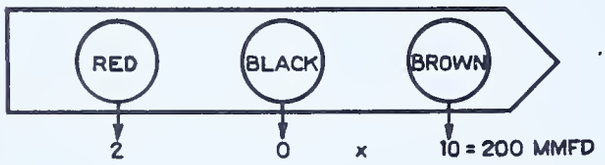

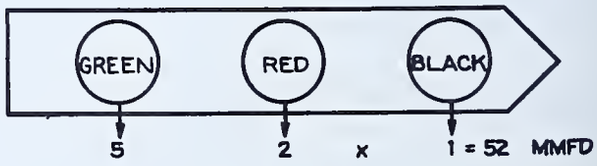

On units marked with six dots the upper three dots are significant figures of capacity in mmfd. These are multiplied by the multiplier indicated by the lower right hand dot. The other two dots are the tolerance and voltage rating.

Example:

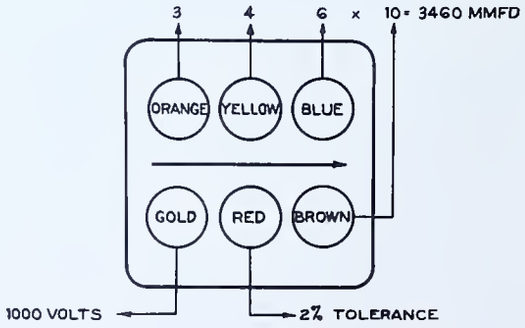

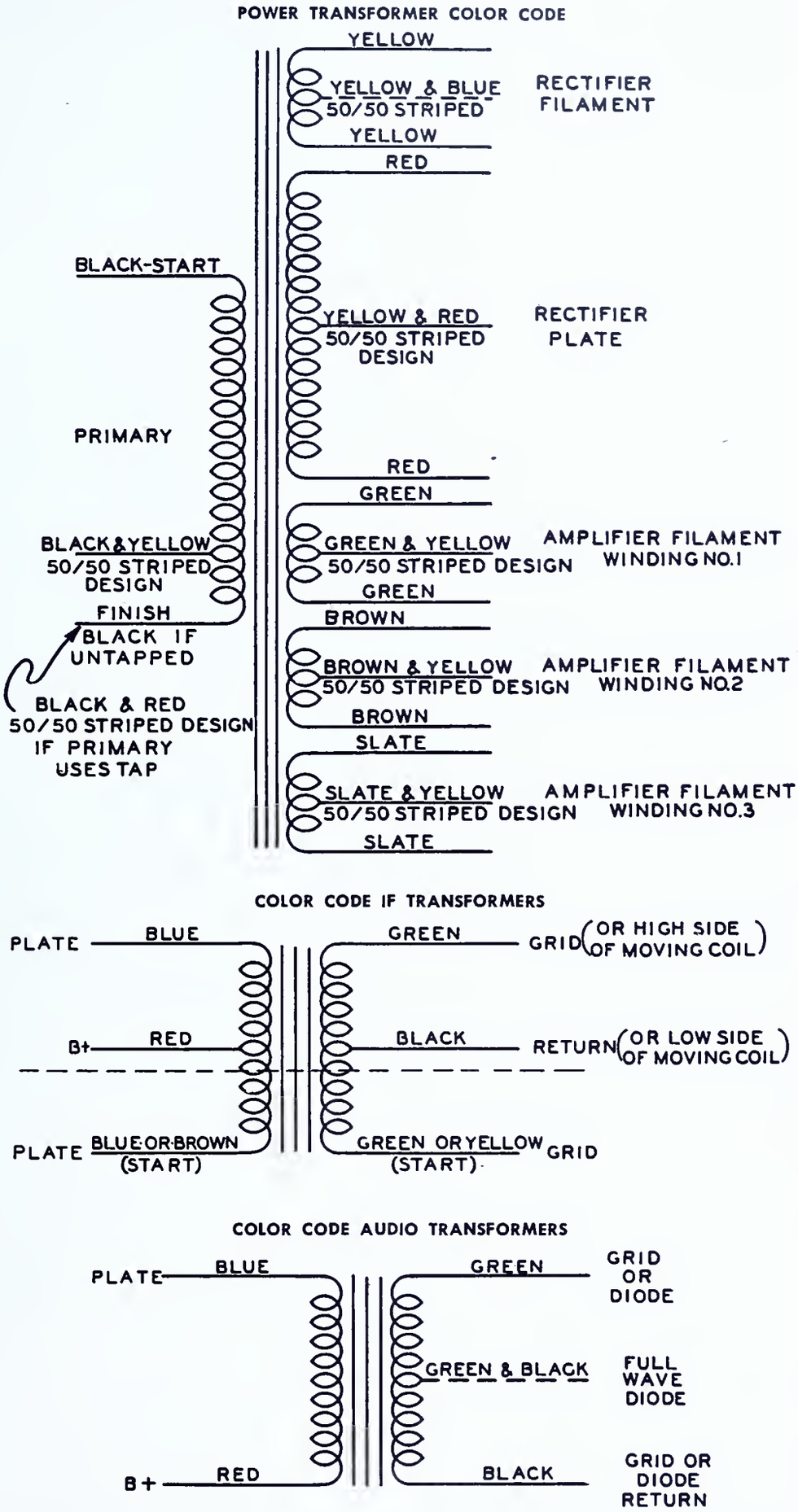

The upper portion (that code above the dotted line) for single primary and/or secondary transformers.

JOB 9

TESTING TUBES

Although the general operation of the various tube testers is similar, the user of such an instrument should carefully read the manual for that particular tester and follow the instructions provided.

TUBE TESTERS AND THEIR USE

Types of testers

Many common radio equipment failures are due to faulty tube operation. However, the structure and electrical characteristics of a tube are complex; and in order to test a tube completely, many measurements have to be made.

There are two types of tube testers or "checkers" in general use today. One type tests the mutual conductance of a tube while the other tests the emission.

The mutual conductance tester operates as follows: A small change in grid voltage is made on the tube. The corresponding change in plate current of the tube is measured on the meter of the tester indicating a good or bad tube. This type of tube checker can be made to test a tube more accurately than the emission tester but since the construction of the latter is less complicated, the emission test is used in most popular checkers.

The tube functions because of a flow of electrons within the tube. This flow is called "emission" and can be measured by a milliammeter. When the tube is new the emission is greatest and gives maximum reading on the meter. After the tube has been used for some time, the emission decreases and gives a smaller reading on the meter. When the tube has been used so long that the meter reading of the emission is less than half scale, the tube is judged bad. A tube's quality is judged by its emission.

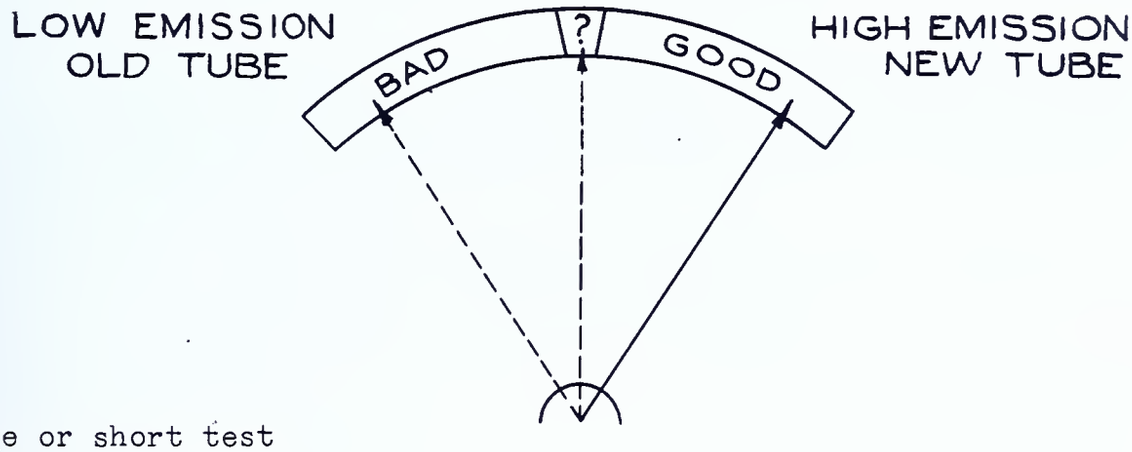

Leakage or short test

Whether the conductance or emission testing instrument is used, however, the first test to be applied is for leakage or shorts between elements of the tube. In the tester there is a small neon bulb connected in the circuit of the element under test. Leakage or short is indicated by the bulb lighting and staying lit. If the bulb lights and then goes out and stays out, the tube is not leaky or shorted at that point. Each element of the tube must be tested for leakage following instructions accompanying the tube tester. If the tube tests shorted, it should be discarded and no other test need be made.

Limitation of testers

Even with all the tests, however, tubes which test "good" in a tester may prove unsatisfactory in operation. The most reliable test is the performance test under actual operating conditions. In general, however, tubes which test "bad" may be discarded as unusable.

CONTROLS

Controls on tube testers vary in name. A list of controls and their function in an average tube tester follows:

1. Line adjustment - permits tube tester to test tubes uniformly on different line voltages. To do this the incoming voltage is changed by the line adjustment control to a fixed value before being applied to the tester. This value is usually indicated by the needle of the meter pointing to the center of its scale.

2. Filament control - adjusts filament voltage to correct value for tube under test.

3. Meter shunt control - is used so that a tube normally having a large emission and a tube normally having a small emission may be tested by the same meter. Since the various type tubes will have differing maximum emission values, the instrument to read them must register in varying ranges. The meter shunt switch sets the instrument for the maximum range of a specific type tube, so that the tube will test "bad" when its emission is low in comparison to its range.

4. Selector switch - permits tubes having different filament connections to be tested in the same socket. If several sockets of the same type are included, this switch may be eliminated.

5. Element switches - permit each element of the tube to be connected to a particular circuit for testing.

6. Leakage or short switch.

7. Emission switch.

8. Power switch - on and off.

Types of Tubes

In testing a tube, its type must be identified. This is given as a number etched or stamped on the tube. In old style tubes numbered as UX 301, UY 480, etc., only the last two numbers count. The new numbers for the same types are "01" and "80" respectively.

New type tubes are designated by a combination of letters and numbers as "6 A 7". The first number indicates the heater voltage. (Voltage indication exceptions: 1 = 1.4 volts, 6 or 7 = 6.3 volts, and 12 or 14 = 12.6 volts. Otherwise exactly as indicated.)

The letter is meaningless except that usually W,X,Y, and Z signify rectifier tubes.

The third number represents the number of elements.

The 6 A 7 therefore is a tube which operates on a heater voltage of 6.3 volts and has 7 elements.

For tubes not marked by this system, one must refer to the tube tester chart or tube manual to get the filament voltage rating.

Caution:

> Before inserting the tube into the tester, carefully check the prongs and pins of the tube base for number, size, and relative position in order to properly enter the appropriate socket of the tester. Do not force or rock the tube to insert it.

STUDY THE TESTER MANUAL CAREFULLY

TESTING TUBES

Specification:

Test the assigned tubes and label as good, bad, or questionable.

Materials needed:

1. 1 doz. assorted receiving type tubes
2. Gummed labels

Equipment needed:

1. Tube tester
2. Instruction manual
3. Head phones (if manual specifies)

Procedure:

1. Study the test procedure given in the instruction manual which is provided with the tester.

2. Study carefully the tester and its various controls.

3. Plug in tube tester to line and turn power switch "on".

4. Adjust line voltage control so needle of meter is at center of scale.

5. Choose one tube, ascertain its type, and consult manual for procedure with that tube. Number tubes consecutively on gummed labels.

6. Set controls of tester as instructed by chart on tube tester for tube to be tested.

7. Insert tube into proper socket as indicated by chart.

8. Place grid clip on cap of tube if tube has grid cap on top. Be sure proper size clip is used.

9. Test tube for leakage. Tap tube with end of pencil or finger as each leakage test is made. If leakage is indicated as tube is tapped, discard tube. If leakage is not indicated proceed to next step.

10. Test tube for quality. If needle of meter registers "good", allow needle to indicate for a few seconds to make sure it does not drop back to "bad". If this happens, tube is defective. If several tests are indicated on tube tester chart for the same tube, make each test. This may mean changing the position of some of the element switches.

11. Record results in notebook on form as shown on Question Sheet.

12. Label tubes as good, bad, or questionable.

QUESTIONS

Place the answers to these questions in your notebook or on form as directed by instructor.

1. What common tube faults are determined by the tube tester used in this job?
2. Is the result "good" or "bad" as indicated by a tube tester completely reliable?
3. How can an absolutely reliable tube test be made?
4. What is the filament voltage of the following tube types: 6 A 8, 7 B 6, 2 A 5, 50 L 7, 117 L 6?
5. What is the filament voltage of the following tube types: 80, 42, 56, 47, 75?
6. Before inserting a tube into its socket, what should one check?
7. What source of information is necessary in tube testing?
8. What two general types of tube checkers are used?
9. Which type can give the more accurate test?
10. Which type did you use?
11. What is "emission" in a vacuum tube?
12. What condition in the tube is indicated when the tube tests "good"? "bad"?
13. What type of test is made first on a tube?
14. What is done to the tube during this test?
15. How many tests were made on an 80 tube? a 6 A 7?, a 75?, a 6 Q 7?
16. What precaution should be taken when the needle of the tester swings to "good"?
17. How is leakage indicated?

Copy This Form in Notebook And Fill In

Tube	Type	Leakage or Short Yes	Leakage or Short No	Good	Bad	Questionable
1	6 A 7		✓	✓		
2						
3						
4						
9						
10						
11						
12						

JOB 10

CAPACITOR TESTERS AND TESTING

Capacitors of several different types are to be found in a radio receiver. The capacitor tester enables an accurate determination of the ability of the capacitor to function properly in the circuit of which it is a part.

CAPACITOR TESTERS AND TESTING

General Information:

A capacitor tester functions by comparing a capacity of fixed value with that of the unknown unit. This is done by turning a calibrated dial until a point of "balance" is reached between the circuits containing the known value and the unknown. This balance is evidenced by one of two methods:

(1) The electric eye - whose aperture is at its narrowest at the point of balance, (see Fig. 1), or
(2) Headphones - in which a signal set up in the capacitor tester is least audible at the point of balance.

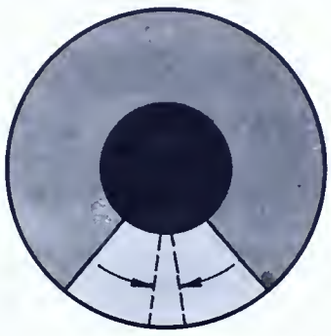

"TUNING EYE"
FIG.-1

Several capacity ranges are usually provided and the one desired may be selected by the range switch.

A capacitor tester checks for the following conditions:

(1) capacity
(2) shorts or opens
(3) leakage current at the rated working voltage
(4) power factor (some instruments)

The instruction book for the capacitor tester provides data which may be used to interpret the readings of the tester in judging the quality of various types of capacitors. Where no capacitor tester is available, the ohmmeter may be used to check shorts and leakage. Some indication of capacity in the larger values (.01 mfd. or more) may also be shown by the ohmmeter.

The usual test procedure is as follows:

(1) Study instruction manual.
(2) Connect tester to power source required.
(3) Turn power switch to "on" position and allow the tester time to begin functioning. This is evidenced by a loud signal in the headphones or a wide "eye" opening.
(4) Connect capacitor to test terminals.
(5) Set selector switch to the range that includes the probable capacity value being measured and find the balance point. If balance is not possible on any range, the capacitor is either shorted or open. The fact that the unit is defective is the significant finding in this case.

(6) When balance is achieved, the dial reading must be multiplied by the multiplier indicated by the range selector switch to obtain the value of capacity being measured.

Note: The scale calibrations are crowded at one end and the ranges overlap; therefore, use the range which will provide balance in the least crowded portion of the scale for greater accuracy.

(7) Perform leakage test as indicated in manual.

The term capacitor is preferred to the word "condenser" as the name for that part of a circuit which provides capacity, (the term used to designate ability of those units to hold or store a quantity of electricity).

Capacitor Specifications: Capacitors are classified and described as to the following:

1. Capacity
2. Fixed or variable (capacity)
3. Types of dielectric
   (a) air
   (b) paper
   (c) mica
   (d) electrolytic (dry or wet)
   (e) oil
4. Voltage rating
5. Type container
6. External connections

Note: (a) Not all types of capacitors need be described by all six categories mentioned above.
(b) In describing a type capacitor, the dielectric is referred to first and other specifications follow; example: Mica, .002 mfd., 600 volt.
(c) Capacitors are sometimes characterized by use; example: filter, bypass, tuning, etc.

1. Capacity

Capacity is measured by the convenient unit, the microfarad. This is $\frac{1}{1,000,000}$ of the farad, the standard unit of capacity. The microfarad is abbreviated mfd. or μfd. The symbol "μ" is the Greek letter "mu" and signifies one-millionth. Sometimes capacity ratings are indicated in micro-microfarads abbreviated mmfd. or $\mu\mu$fd. This unit is $\frac{1}{1,000,000}$ of the microfarad or $\frac{1}{1,000,000,000,000}$ (one-trillionth) of the farad. For practical purposes, it is necessary to be able to change mfd. to mmfd. and vice versa.

Thus the number of mmfd. = mfd. x 1,000,000
and the number of mfd. = $\frac{\text{mmfd.}}{1,000,000}$

Capacity depends upon the following:

(a) The size and number of the plates or foils.
(b) The distance between the plates.
(c) The material that acts as the dielectric.

2. A fixed capacitor is one in which the capacity is not variable.

A variable capacitor is one in which the capacity can be varied by a manual control. Nearly all such capacitors are of the air dielectric type. The common variable capacitor is made of a set of parallel metal plates mounted on a shaft which can be moved to mesh with a set of fixed parallel plates. The movable group is called the rotor, the fixed group is called the stator. See Fig. 2.

VARIABLE AIR DIELECTRIC CAPACITORS

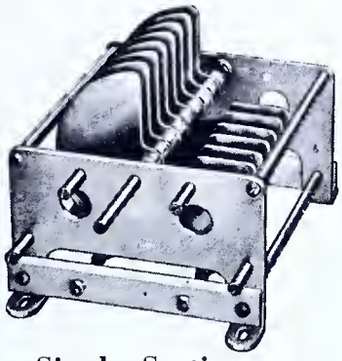

Single Section

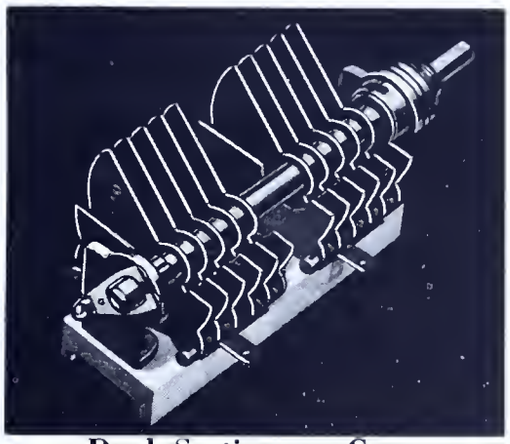

Dual Section or Gang

FIG. 2

"Padder" or Trimmer Capacitors:

A variation of the variable capacitor is the "padder" or trimmer which can be adjusted in capacity by the rotation of a screw to vary the distance between the plates. Such plates are usually separated by mica which prevents shorts between the plates. See Fig. 3.

PADDERS OR TRIMMERS

FIG. 3

3. Types of Dielectric

(a) Air - The common type is illustrated in Fig. 2 in which the air between the plates acts as the dielectric.
(b) Paper-Tubular Capacitors - Consist of two sheets of aluminum foil separated by two or more sheets of wax impregnated paper insulation or dielectric between them. These are rolled in the form of a tube. See Fig. 4. Tinned copper leads are soldered to each foil (plate) and extended through the waxed-filled ends of the paper tube in which they are contained. The wax serves to hold the assembly rigid and to keep out moisture. Most of these capacitors are marked at one end with the word "ground" or "outside foil", this end should be connected to the negative (-) terminal of the capacitor tester.

Paper-Metal Cased Capacitors - Consist of the same internal elements as the paper-tubular capacitors but are housed in a metal case used for special shielding purposes or greater mechanical protection. See Fig. 4.

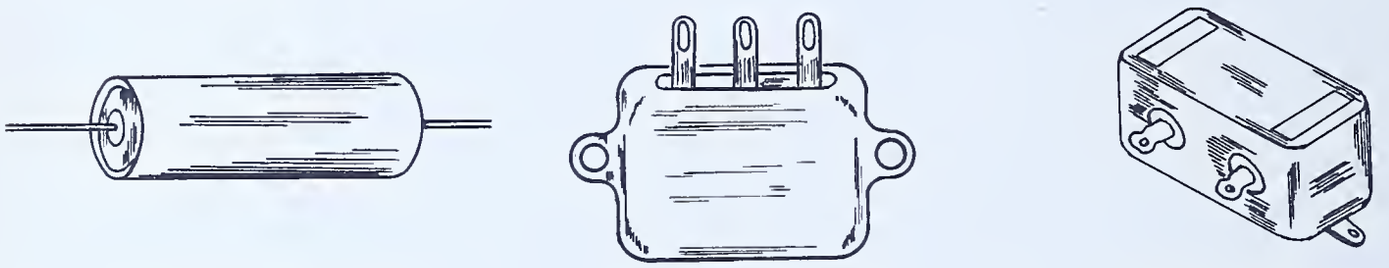

PAPER TUBULAR | DUAL SECTION METAL CASED | SINGLE SECTION METAL CASED

FIG. 4

(c) Mica Capacitors - Consist of two groups of plates with alternate sheets of metal foil separated by mica. These groups are clamped and molded in bakelite. Each group of plates has a tinned brass wire or perforated lug connected to it and extended through the mold. See Fig. 5.

FIG. 5

(d) Electrolytic Capacitors, Dry Type (See Fig. 6) - Consist of two metal plates separated by gauze saturated with a chemical - one of the plates acts as the positive (+) terminal, the other acts as a contact surface to the negative (-) chemical gauze plate. The chemical reaction between the saturated gauze and the positive plate forms the dielectric.

FIG. 6

Dry electrolytic capacitors may be mounted in any position. Connections are made by lead wires or lugs. The positive lead wire is usually red and the negative lead is usually black. Multiple unit capacitors introduce leads of other colors; such as, blue, green or yellow. These may be either positive or negative.

Metal cased units often use the case as a terminal, this is usually negative.

Electrolytic Capacitors, Wet Type (See Fig. 7) - Consist of a positive (+) metal plate, a negative (-) liquid chemical plate, and the dielectric which is the result of chemical action. Electrolytic capacitors may be enclosed in metal or cardboard containers.

Wet electrolytic capacitors must always be mounted vertically with the "breather" at the top. (The "breather" is a vent hole which provides for escape of gases generated within the container.) The metal can container is always the negative terminal.

Polarity must be observed when installing electrolytic capacitors in radio equipment or in testing.

FIG. 7

(e) Oil Filled Capacitors - Consist of metal foils mechanically separated by a paper layer, completely impregnated with a special oil, and cased in a sealed container. The use of oil as the dielectric greatly increases the voltage rating of the capacitor.

For very high voltage work, if the capacity rating is small, the unit may consist of thick plates that do not need paper separators. This type also is filled with oil and cased in a sealed container.

4. Voltage Rating

The voltage rating of a capacitor is its d-c working voltage or its a-c peak voltage.

5. Types of Containers

Containers may be made of metal, paper, bakelite, or composition materials. The materials employed will depend upon use and cost.

6. External Connections

Capacitors may be provided with lugs or wire leads for each capacitor unit in a common container. In dual or multiple units, common negative or common positive wire leads or lugs may be used as one of the terminals. Each of the units in such a case would be provided with individual leads or lugs for the other terminal.

Information concerning the connection polarities and proper identification of units within a common container is marked on the container itself.

Mounting - Capacitors may be mounted by their own leads, or by flanges, straps, or studs. The type of mounting depends upon the type of capacitor and the ruggedness desired. See Fig. 8.

Leakage - Since no insulator is perfect there is some small current flow through the capacitor. This is called leakage current. The quantity is almost imperceptible in paper, mica, air and oil filled capacitors but may be considerable in the electrolytic types.

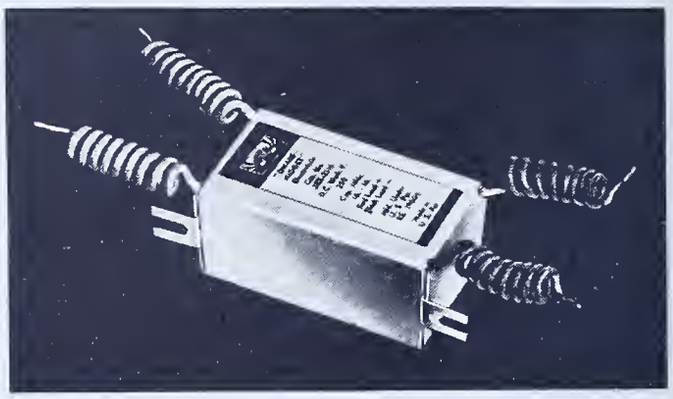

FIG. 8

Specifications:

1. Test the assorted capacitors as indicated in the procedure with

   a. The capacitor tester
   b. The ohmmeter

2. Enter results on copies of forms provided.
3. Compare results of the two tests and repeat tests where discrepancies occur.
4. Calculate percentage variation from marked capacity for all capacitors tested.

Equipment needed:

1. Capacitor Tester
2. Ohmmeter or Multimeter

Materials needed:

1. Assorted capacitors, at least 20 of various types, voltage ratings, and capacities.

Procedure:

Part A. Testing with capacitor testers

1. Obtain equipment and materials from stock room together with manufacturer's instruction manual on the use of the test equipment.

2. Study the test procedures in the instruction manual.

3. Study all controls on the capacitor tester and familiarize yourself with the use and function of these controls.

4. Attach a tag numbering each capacitor serially.

5. Prepare a form as below. (On lined paper)

Capacitor	Type	Rated Capacity	Measured Capacity	Percentage variation from marked capacity	Shorted	Open	Leaky
1							
2							
3							
4							
5							
6							
15							
16							
17							
18							
19							
20							

6. Select capacitor #1 and test according to manual of instructions.

7. Record results for each capacitor on form.

Precautions to observe in testing:

(a) Observe capacitor polarities.

(b) Do not apply a greater test voltage than the rated voltage of the capacitor under test.

(c) Electrolytic leakage checks are inaccurate if made at other than the rated voltage.

Safety Precautions:

(d) Assume that all capacitors which are rated over one mfd. and 100 volts are charged unless you are sure that they are not.

(e) Discharge all such capacitors by placing across its terminals a resistor of 1000 (or more) ohms.

Note: Discharging the capacitor in this manner prevents any injury which might occur to the dielectric.

8. Calculate percentage of variation from marked capacity.

Formula: $\% \text{ Variation} = \dfrac{\text{Measured Capacity} \overset{\text{(minus)}}{-} \text{Rated Capacity}}{\text{Rated Capacity}} \times 100$

9. Repeat procedure for all the other capacitors.

Part B. Capacitor checking with ohmmeter

1. Use the same serially numbered capacitors.

2. Prepare form as follows: (On lined paper)

Capacitor	Type	Good	Shorted	Open	Leaky
1					
2					
16					
17					
18					
19					
20					

3. Set the volt-ohmmeter for resistance testing on the highest resistance scale.

4. Test each capacitor by touching the meter leads to the capacitor's terminals and noting results as follows:

   Caution: When testing electrolytic capacitors be sure to connect the positive capacitor lead to the meter lead that goes to the positive terminal of the internal battery.

   a. If the meter needle swings to the end of the scale and stays there, the capacitor is shorted.

   b. If the meter needle stays at some intermediate position, the capacitor is leaky. All electrolytic capacitors have some leakage current.

   c. If the needle swings a short distance and then returns to its original position, it indicates that the capacitor has taken a charge and that its insulation is good. The amount of the initial swing of the needle is an indication of the capacitance of the unit tested.

   d. If the meter needle has no initial swing it indicates that:

      (1) the capacitor is open, or
      (2) that its capacitance is so small that it does not draw enough charging current to deflect the meter needle. In such instances only the capacitor tester can test that unit.

5. Tabulate the results of the tests on each capacitor.

6. Compare results of the test made in Part A and Part B as tabulated in the columns marked shorted, open, leaky.

   In case of discrepancy, repeat tests on that particular capacitor with the capacitor tester and ohmmeter.

QUESTIONS

Place the answers to these questions in your notebook or on form as directed by instructor.

1. What is the difference between a fixed and a variable capacitor?
2. What is meant by the word "dielectric"?
3. What is "capacity" of a unit?
4. On what does capacity depend?
5. What are the various ways of specifying capacitors?
6. What is meant by the point of balance in a capacitor tester?
7. In what ways may the point of balance be indicated? Describe.
8. If the tested unit cannot be balanced, what is its condition?
9. Which range of a capacitor should be chosen for a particular unit?
10. What is the unit of capacity?
11. What is the difference between the unit "mfd." and "mmfd."?
12. What forms the dielectric in the "dry type" electrolytic capacitor?
13. Why is there a "breather" on wet type electrolytics?
14. What two voltages may be used to express the voltage rating of a capacitor?
15. Why should the high voltage, high capacity units be discharged before testing
16. Which terminal of a wet electrolytic capacitor is negative?
17. Which terminal of a paper-tubular capacitor is connected to the negative (-) terminal of the capacitor tester?
18. Where the term "mica capacitor" is used, to what does the word "mica" refer?
19. Which is the first term used in describing a capacitor?
20. To what voltages, a-c and d-c, does the term "working voltage" apply?
21. What does "dual unit" mean?
22. If a capacitor has one red lead and one black lead, which is positive and which is negative?
23. On the basis of the measurements made in the job, how much may an electrolytic capacitor vary from its rated value and still function satisfactorily? A mica capacitor? A paper capacitor?
24. What is leakage current?
25. Why is there leakage current?

Report:

Write a report to include: (1) a description of general procedures in testing capacitors on the make tester used, (2) the forms showing the readings made and (3) answers to questions.

References:

Ghirardi, A. A., Radio Physics Course (Second Edition), Chapter 10.

Timbie, W. H., Elements of Electricity (Third Edition), Chapter 13.

Watson, Welsh and Eby, Understanding Radio, pp. 175-186.

JOB 11

THE SLIDE BACK VACUUM TUBE VOLTMETER

A vacuum tube voltmeter measures voltage without drawing appreciable current from the circuit being measured. The moving coil type voltmeter needs considerable current for operation and thus gives inaccurate readings when high resistance circuits are tested. This error is eliminated when tests are made with the slide back type vacuum tube voltmeter, one of which is constructed in this unit.

THE SLIDE BACK VACUUM TUBE VOLTMETER

General Information:

The vacuum tube voltmeter is used in radio work to measure (1) control grid, (2) automatic volume control, (3) oscillator voltages, and (4) any other high resistance low current circuit. These circuits do not have the current available to operate the ordinary voltmeter. Another advantage of this type instrument is that it is not affected greatly by the frequency of the voltage being read. High frequencies will introduce errors as great as 50% with the moving coil or ordinary type voltmeter.

Vacuum tube voltmeters may be of several types, the most common being the slide back and the direct reading varieties. This job is concerned with the slide back type.

(Refer to the schematic circuit diagram, Fig. 2, to follow this explanation.) All vacuum tube voltmeters utilize the vacuum tube principle - that any change in the grid #3 voltage produces a change in the plate (#2) current measured in (M). This idea is applied in practice in several modified forms. (Note - refer to the operating manuals of any of the better commercial vacuum tube voltmeters for example of modified types).

In the slide back type the voltage to be measured is connected by test leads to the "input" jacks. This produces a change in the current flow in the plate circuit as indicated in (M) from the normal amount called "false zero". False zero is the reading obtained when the input leads are shorted. To counterbalance this voltage, R_1 is adjusted so that the pointer in (M) "slides back" to its original position. The counter-balancing voltage is read by the voltmeter (V) and is equal to the voltage being measured at the input jacks.

Note that the voltage and current which operate the voltmeter are independent of the external voltage being measured.

Specifications:

1. Prepare a wiring diagram from the schematic diagram and layout.

2. Construct the vacuum tube voltmeter as directed.

3. Test the vacuum tube voltmeter as directed.

4. Record such observations and measurements as required on a copy of the tabulation forms.

5. Answer all questions in your notebook.

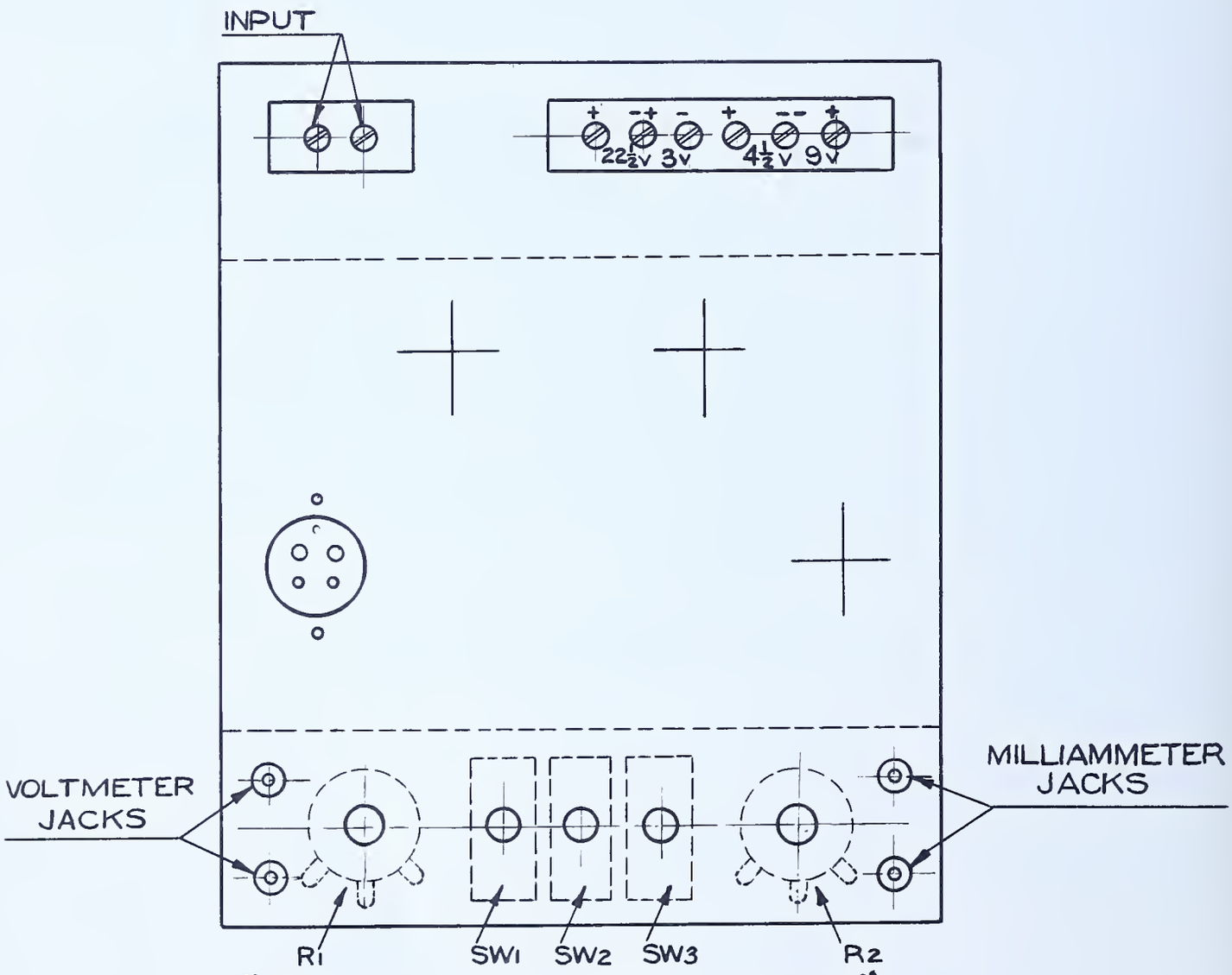

"TOP VIEW CHASSIS LAYOUT"

FIG. 1

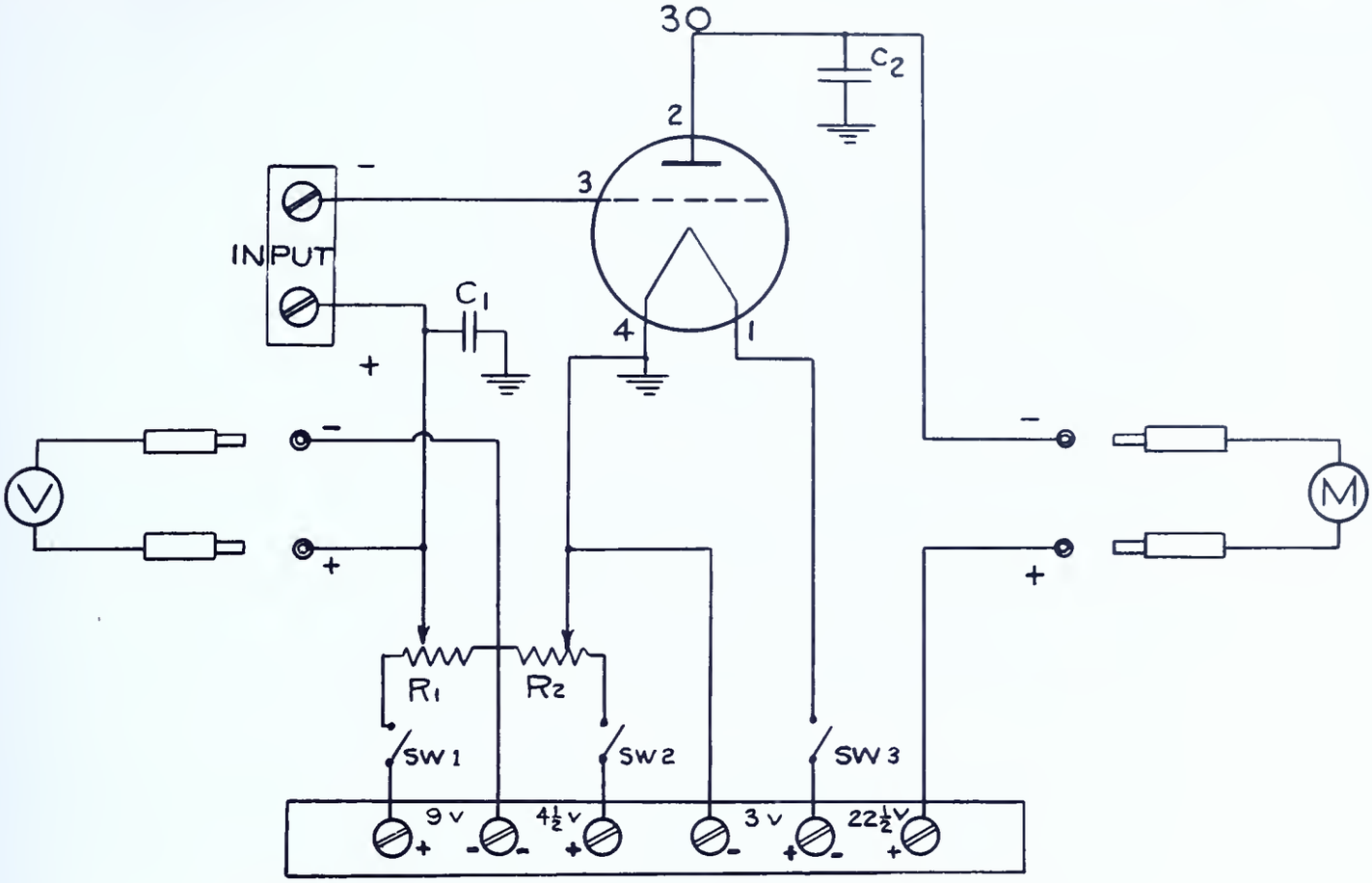

SCHEMATIC DIAGRAM — VACUUM TUBE VOLTMETER

FIG. 2

Tools needed:

1. Screw driver
2. Long nose pliers
3. Soldering iron
4. Diagonal pliers
5. Socket wrenches

Equipment needed:

1. 0-1 milliammeter, d-c
2. 0-10 voltmeter, d-c
3. Any working radio receiver
4. 1- Type 30 tube

Materials needed:

1. C_1 - .0005 mfd. fixed condenser
2. C_2 - .01 mfd. fixed condenser
3. R_1 - 2000 ohm wire wound potentiometer
4. R_2 - 1000 ohm wire wound potentiometer
5. Sw_1, Sw_2, Sw_3 - S.P.S.T. switches
6. 1 - 4 Prong tube socket
7. 4 - Phone tip jacks
8. 1 - 6 Terminal screw type terminal strip
9. 1 - 2 Terminal screw type terminal strip
10. 1 - Chassis - 5" x 7½" x 2" (prepared in Job 5)
11. 1 - Battery, 3 volt
12. 1 - Battery, 4.5 volt
13. 1 - Battery, 9 volt
14. 2 - Dry cells
15. Miscellaneous hardware as needed
16. Wire, #20, solid, tinned push-back recommended
17. Rosin core solder

Procedure:

Part A. Construction

1. Obtain materials needed from stock room.

2. Inspect all parts for visible damage and check continuity.

3. Repair any visible defects that you are able to correct, and obtain from tool room replacements for parts that cannot be easily repaired.

4. Draw a wiring diagram full size, on a rectangle 5" x $7\frac{1}{2}$" using the chassis layout and the schematic circuit diagram given in the specifications of this job. Note the given diagrams are drawn to one-half scale. Study Reference BB, page 203.

   The chassis prepared in Job 5 was designed on the mechanical layout principles indicated in Reference BB.

   Note: The tube symbols used in the schematic diagram have the standard arrangement of elements used in recent tube manuals. Base pin connections of tubes being used must be known when wiring tube sockets. These may be found by referring to the appropriate diagram in the tube manual.
   It is standard practice to show bottom views of base pin connections. This is the view of the socket in sub-chassis wiring.

5. Have wiring diagram checked and approved by instructor.

6. Mount all principal parts on chassis.

7. Check for grounds between the phone tip jacks and chassis. (Use ohmmeter and test for short reading between these points.)

8. Mark a V on the chassis between the voltmeter jacks and an M between the milliammeter jacks.

9. Wire according to wiring diagram.

10. Have instructor inspect finished job for quality, correct wiring, and proper jack markings.

Part B. Test

1. Connect all batteries as required by the schematic diagram.

2. Have instructor check battery connections.

3. Connect voltmeter and milliammeter.

4. Put all switches in "on" position.

5. Measure and make note of voltages between: (see Fig. 2)
   (a) Plate terminal on tube socket (2) and chassis.
   (b) Filament terminals on tube socket (1 and 4).
   (c) Outside terminals of R_1 and R_2.

6. Compare measurements obtained in Step 5 to the battery voltages as indicated in schematic diagram. If there is decided difference between the two, find and correct the fault which causes this condition. An old battery may cause low voltage reading, although other defects may also cause this. Check with instructor. If obtained measurements are in reasonable agreement with those called for on diagram continue the test as in Step 7. If measurements do not conform check the battery circuits to find cause and fault.

7. Insert tube in socket.

8. Turn R_1, to be sure that voltmeter (V) registers a steady movement from 0 to 9 volts or vice versa. This checks condition of control, if needle jumps or is irregular in motion, then the control is faulty and should be replaced.

9. Set R_1 so that voltmeter reads 0.

10. Short circuit input terminals.

11. Set R_2 to secure false zero reading on milliammeter. False zero is any chosen value. In this job use 0.8 M.A. Do not disturb this setting during the rest of the test procedure.

12. Connect one dry cell to input jacks - observe polarity.

13. Adjust R_1 until M.A. pointer is in false zero position determined in Step 11 above.

14. Record reading of voltmeter using copy of form below. This is the voltage obtained from the dry cell being measured.

15. Repeat Steps 9, 10, 11, 13 and 14 for two dry cells in series connected to input terminals to secure 3 volt reading results.

16. Disconnect dry cells after test.

17. Connect radio receiver and tune in any station.

18. With help of instructor find the tube which when touched on its grid terminal with hand causes a decided click in speaker.

19. Read voltage with any ordinary voltmeter (which is not a vacuum tube v.m.) between grid cap chosen in Step 18 and chassis of set.

20. Record reading and note effect on station signal while reading voltage.

21. Read voltage with vacuum tube voltmeter between same point as in 18 according to Steps 9, 10, 11, 13 and 14.

22. Record voltage reading and note effect on station signal.

COPY THIS FORM IN NOTEBOOK FOR USE IN THIS JOB

	V.T.V.M.	Ordinary V.M.	Effect on Signal
Single dry cell			
2 Dry cells in series			
Control Grid (Step 19)			
Control Grid (Step 21)			

23. Answer questions and write report as directed on Question Sheet.

24. Show report to instructor. If approved, dismantle and return all parts to stock room after cleaning them. (Obtain receipt for parts.)

25. Give report and the receipt for returned parts to instructor.

THE RELATIONSHIP OF THE SCHEMATIC DIAGRAM, MECHANICAL LAYOUT AND WIRING DIAGRAM OF RADIO EQUIPMENT

The schematic diagram of a circuit shows the electrical connections of all component parts and other electrical specifications where needed. See Fig. 2 in Job 11.

From this diagram, a practical mechanical layout and wiring diagram must be prepared. It is not possible, except through long practice, to prepare such a layout and wiring diagram without experimental arrangement and rearrangement of parts.

The purpose of the layout is to show the exact location of the principal parts; namely, tube sockets, transformers, coils, and tuning gang.

The purpose of the wiring diagram is to show the position of the principal parts named above and, in addition, all small resistors, capacitors, wires, terminal strips, and tie points.

The final mechanical design should be based on the following principles:

1. Parts must be placed to allow sufficient mechanical clearance; e.g., tubes must be so placed that they are accessible for removal; tuning gang rotors must have room to rotate; resistors and small capacitors should not be crowded.

2. Parts must be rigidly mounted to withstand reasonable mechanical shock and vibration. To do this:

   a. use locknuts and lockwashers.

   b. use bolts and screws that pass through the chassis to hold heavy parts such as transformers.

   c. use terminal strips and tie points to hold miscellaneous small resistors, capacitors, and the junctions of wire ends where the socket terminals themselves do not provide sufficient mechanical support.

   d. cable parallel conductors where such a practice is feasible.

3. Exposed parts should be protected from mechanical injury, moisture and dirt by using covers or shields.

4. Principal parts should be mounted on top of the chassis in the same order, from left to right, as the parts are arranged in the schematic diagram. Normally, this makes wiring easier.

5. Parts must be arranged so that the fewest and shortest possible wires will be used.

   a. All grid wires in particular should be short.
   b. Arrange tube sockets and other parts so that there will be the least possible crossing of wires. Particularly avoid the criss-crossing of filament wiring by the plate and grid leads.
   c. Where the filament circuits are wired in parallel and use a separate wire for each side of the circuit, the wires between sockets should be twisted to form a pair.

      Note: By grounding one side of the filament circuit the chassis may act as one of the wires.

6. Place operating controls and frequently used connectors in accessible positions, preferably across the front panel from left to right in the same order that they are used when being operated. If there are too many connections to fit conveniently on the front panel, they should be placed on the rear or sides closest to the point where they are connected in the circuit.

7. Mount power transformer so that its field is at right angles to the fields of other transformers and as far as possible from those transformers and the input circuits. This usually means putting the power transformer on the same side of the chassis as the power output tube, and the iron cores at right angles as in Fig. 3.

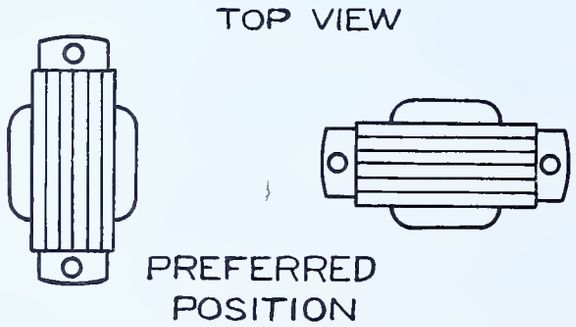

TRANSFORMERS MOUNTED WITH LAMINATIONS AT RIGHT ANGLES

FIG.-3

8. Although the factors mentioned above take precedence, appearance also should be considered, involving:

   a. alignment on centers and symmetrical arrangement of parts.
   b. equal distribution of available space so that about the same amount of clearance is provided for each principal part.

The Use of Screw Type Terminal Strips

Where external equipment such as batteries, power supplies, antenna and ground connections, etc. are necessary, these connections are easily made by the use of screw type terminal strips. Terminal strips in general are used to prevent vibration from breaking the leads and to prevent shifting of the relative position of the parts, thereby causing short circuits. The use of these terminal strips for instrument connections is discouraged due to the possibility of short circuits because of possible contact of the metal ends. See Fig. 4.

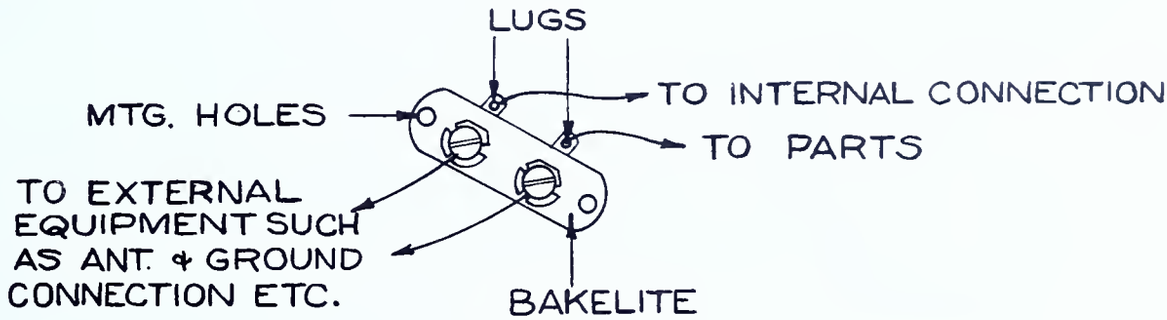

FIG.-4

The Use of Lug Type Terminal Strips

Lug type terminal strips are used for the secure mounting of such small parts as resistors, paper and mica fixed condensers, and r-f chokes, all of which are usually equipped with pig-tail connections.

These mountings are also used in pairs since there may be two or more leads from each unit at opposite ends. See Fig. 5.

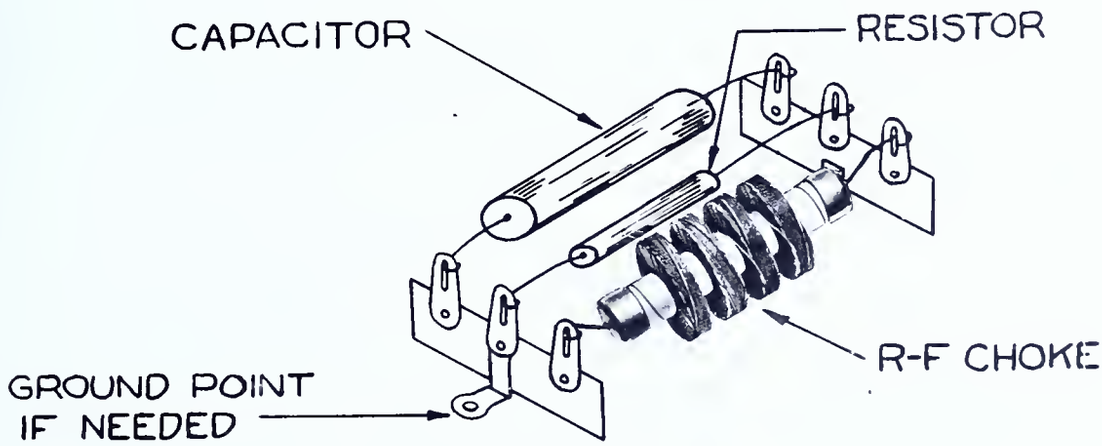

FIG.-5

The Use of Tie Points

Tie points are somewhat similar to lug type terminal strips although their purpose is somewhat different.

Where it is necessary to join two or more wires electrically, they are soldered at a common tie point, thus eliminating the need for splices and bulky connections. See Fig. 6. In radio work, splices and splicing compounds (tape, etc.) are very seldom used. Tie points are not used, however, when tube socket terminals are close enough to be conveniently used instead of tie points.

FIG.-6

The Use of Soldering Lugs and Socket Terminals as Tie Points

Soldering lugs are mounted on the chassis with rivets or screws. They are used as convenient ground connections. Where possible, soldering lugs are mounted by the screws that hold other parts. See Fig. 7.

When feasible use tube socket terminals to reduce the number of tie points required. See Fig. 7.

Spaghetti (a lacquer-treated flexible cambric tubing) is sometimes used over the wire ends of capacitors and resistors when such ends are bare for any appreciable length. This is to prevent shorts to the chassis or to other wiring and terminals.

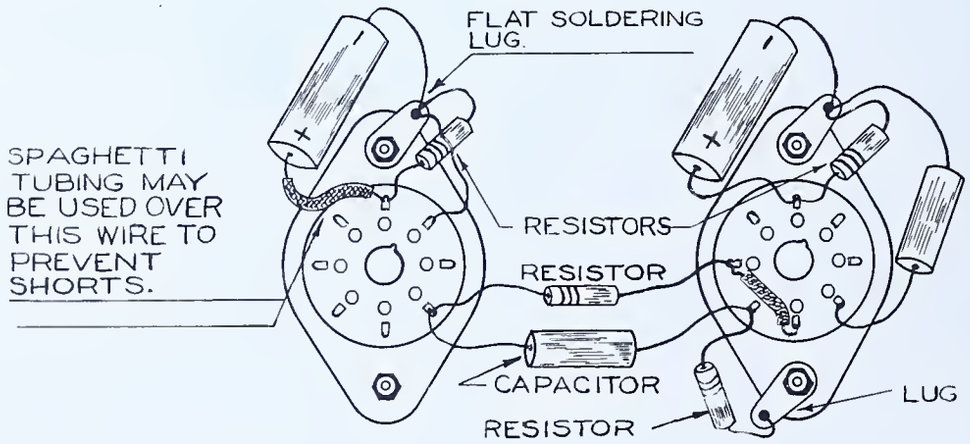

FIG.-7

Figure illustrates how small capacitors and resistors may be supported directly by terminals of sockets and soldering lugs.

The Use of Instrument Jacks and Phone Tip Jacks

The instrument jack (usually a closed circuit jack) and phone tip jack are used where external instruments and equipment such as headphones and loudspeakers are to be connected. Jacks are well insulated and provide a means of readily connecting and disconnecting these parts. See Fig. 8.

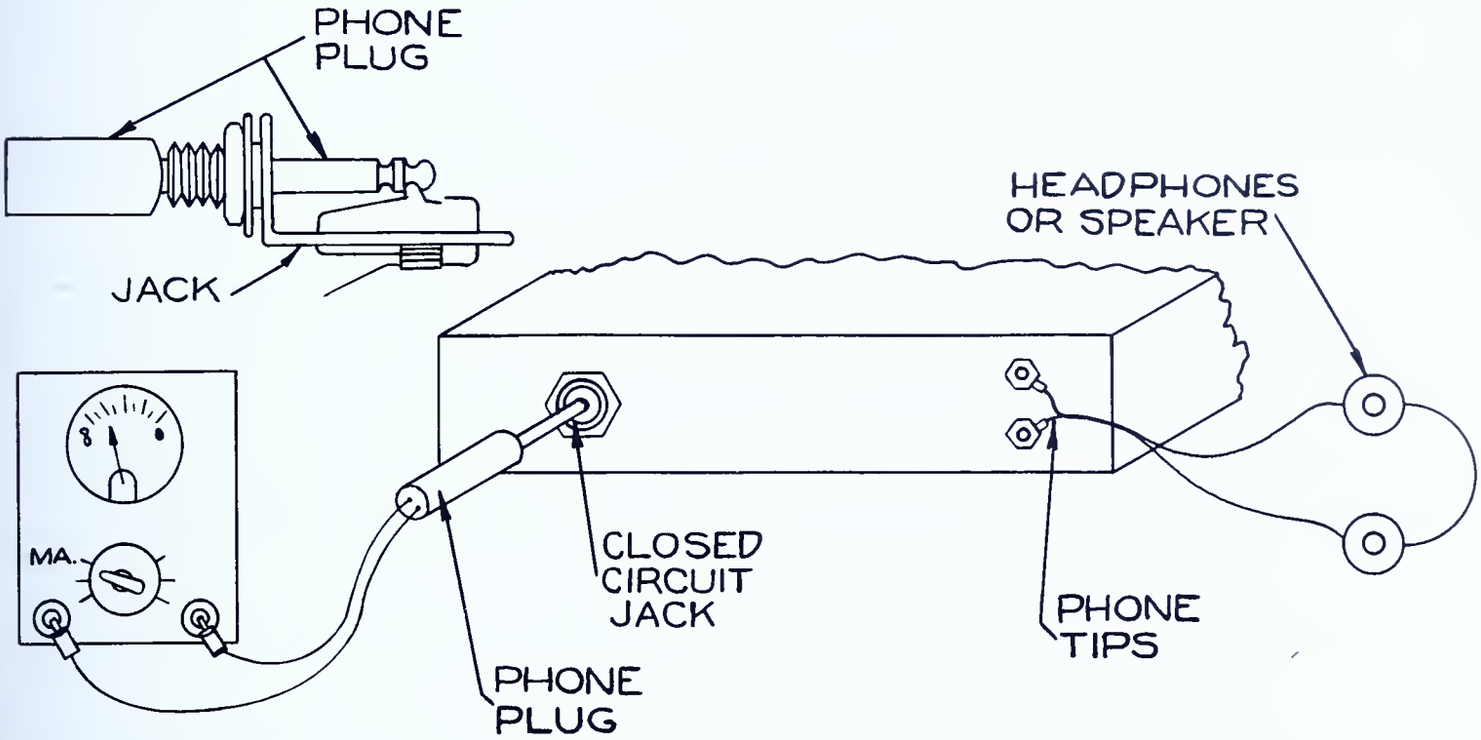

FIG.-8

Procedure in Preparing Layout and Wiring Diagrams.

1. Study carefully the design principles.

2. Prepare a parts list and obtain parts from stock room for the job to be done.

3. Study carefully the schematic diagram.

4. Place principal parts on top of the chassis and arrange them as indicated by the schematic diagram and on the basis of suggestions contained in this reference.

5. Make rough sketch of top view of this arrangement.

6. Turn chassis bottom up and prepare a sketch showing the bottom view of this arrangement. Show all the principal parts which are mounted on top of the chassis by dotted lines.

7. Refer to schematic diagram again and place miscellaneous small parts in their respective positions. Do this to determine the possible position of the tie points, terminal strips, and solder lugs.

8. Add to sketch made in Step 6 the position of miscellaneous parts, tie points, terminal strips, and solder lugs.

9. Sketch in the wires showing their exact position on the chassis. Indicate color coded leads or any special markings on wires connected to parts.

10. Study completed sketch for needed rearrangement that might reduce length of wire leads; make for greater convenience in assembly; and in general, carry out in a better way the suggestions of this reference.

11. Make such rearrangements as may be determined in Step 10.

12. Correct sketch to incorporate final changes.

13. Have instructor check sketch; and if approved, make a neat final drawing.

Note: If job sheets provide a layout of the principal parts, it is still necessary to:

a. determine the position of miscellaneous parts such as resistors, capacitors, tie points, and terminal strips other than those indicated on the layout.

b. make a wiring diagram showing the position of the wire.

QUESTIONS

Place the answers to these questions in your notebook or on form as directed by instructor.

Write report on job to include:

a. The schematic diagram

b. The wiring diagram

c. Graph of recorded readings

d. Answers to questions

1. What is the highest voltage that can be measured with this vacuum tube voltmeter? Why?

2. What is the principal advantage of the V.T.V.M. over the moving coil type?

3. Name 3 types of circuit voltage which the V.T.V.M. measures that the ordinary type will not.

4. How does the frequency of the voltage affect a vacuum tube voltmeter?

5. What are the most common types of vacuum tube voltmeters?

6. How is false zero obtained?

7. How does one check the condition of the control on a vacuum tube voltmeter?

8. To which element of the tube is the 0-1 milliammeter connected?

9. To which element of the tube is the voltage to be tested connected?

10. Explain in general the principle of operation of the V.T.V.M.

11. Compare the effects of the V.T.V.M. and the ordinary voltmeter when connected to a control grid circuit.

12. What is the difference between a schematic diagram and a wiring diagram?

13. What is the difference between a mechanical layout and a wiring diagram?

14. Name three devices used to increase mechanical strength and rigidity.

15. How are exposed parts protected against mechanical injury?

16. In wiring which leads should generally be short?

17. In what order should controls be placed? Where should they be placed?

18. What precautions should be taken in the placement of transformers?

19. Explain the difference in application between terminal strips of the screw type and lug type.

20. Contrast the use of soldering lugs and tie points.

21. Why are instrument and phone tip jacks used?

References:

Watson, Welsh and Eby, Understanding Radio, pp. 336-337.

The Radio Amateur's Handbook (Any Edition), A. R. R. L., Chapter on Measurements

JOB 12

REMOVAL AND REINSTALLATION OF INDIVIDUAL COMPONENTS FROM RADIO CHASSIS

The importance to a field service worker of ability to remove and replace quickly the defective parts of a radio cannot be over-emphasized. Much practice is required to develop the skill and care necessary to prevent further damage to the part itself or to the adjacent parts. The general objective of this unit is to develop ability to remove, clean, check and reinstall the components of a set.

MAKING SKETCHES OF PARTS AND WIRING

General Information:

A sketch of a part and its location on the chassis is helpful in remounting. The position and connection of wires associated with any part should be sketched so their relocation and connection will be the same when the part is reinstalled.

Procedure:

1. Position chassis so that part to be removed can be readily seen.

2. Sketch part to include:
   (a) direction of mounting;
   (b) wires connected to part.

   Note: It may be necessary to make two separate sketches, one showing above chassis view and one showing under chassis view. Make sketch large enough to avoid confusion.

3. Number terminals on sketch and indicate which lead goes to each terminal.

4. Indicate color of wire on sketch.

5. Label view and name of part on sketch.

6. Have instructor check sketch.

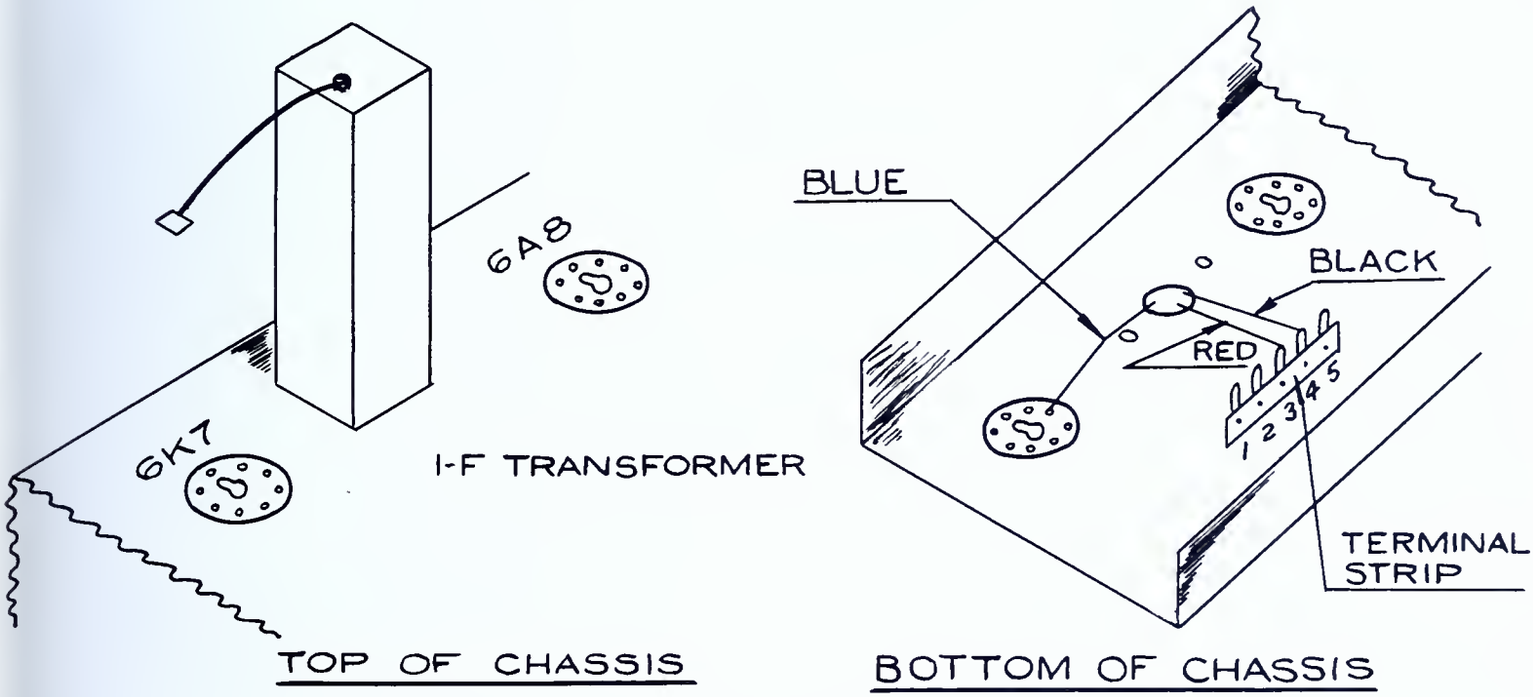

BLUE lead from i-f transformer to No. 3 terminal of 6A8 tube socket.
RED lead to No. 3 terminal of terminal strip.
BLACK lead to No. 4 terminal of terminal strip.

FIG. 1

REMOVING WIRES FROM TERMINALS

General Information:

Before parts can be removed from a chassis the associated wires must be disconnected. Wires usually have been crimped or wrapped to terminals before being soldered.

Care must be used in removing wiring from lugs on fibrous material such as socket lug strips, small wax bypass capacitor, etc. If the iron is held on the lug too long these materials will melt or char, rendering the component useless. This also applies to r-f coils and r-f chokes. Care must be exercised in order that the fine wire of the coil lead itself may not be burnt off.

Procedure:

1. Apply tip of soldering iron to joint and melt solder.

2. Loosen crimped end of wire with a metal pick.

3. Grasp end of wire with long nose pliers and remove completely from terminal.

4. Remove old solder from wire or terminal. Solder that falls into radio should be removed at once.

DRILLING OUT RIVETS

General Information:

Parts that are light in weight are very often riveted to the chassis. This method of mounting is cheap and speedy but not strong enough for heavy parts. A rivet should never be used to complete an electrical circuit. The most common method of removing rivets is by drilling them out. Care must be exercised so that parts and wiring are not injured during the drilling operation. If possible drilling should be done against the spread part of the rivet.

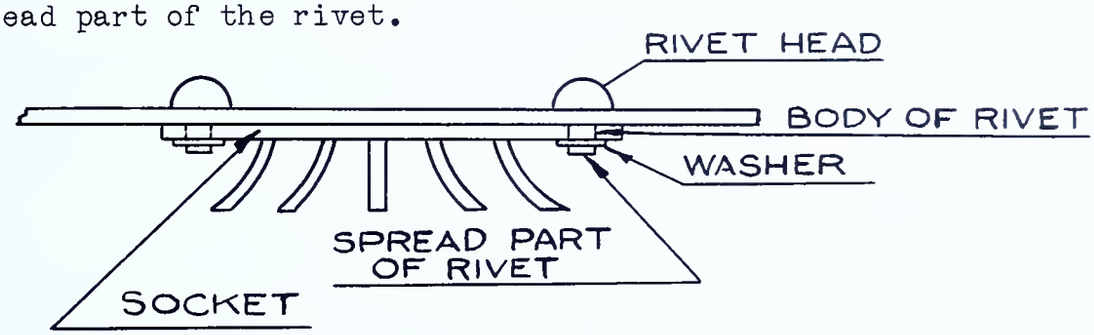

FIG.-2

Specification:

Remove some riveted part from chassis.

Tools needed:

1. Center punch
2. Hammer
3. Drift punch
4. Set of drills

Equipment needed:

1. Electric drill

Procedure:

1. Remove tubes from chassis.

2. Determine if drilling can be done more easily against spread part of rivet or head.

3. Position chassis, making that part of rivet accessible to drill.

   Note: Wiring or parts that interfere with drilling operation should be adjusted or removed.

4. Support chassis in a rigid position.

5. Center punch head if drilling on head.

6. Remove end of rivet by drilling. Use a drill one or two sizes larger than body of rivet, approximately one-half the size of the head.

7. Place point of drift punch against drilled end of rivet and strike head of punch sharply with hammer. Use a drift punch the same size as the body of the rivet.

REMOVING PARTS MOUNTED BY METAL "TANGS" OR "EARS"

General Information:

Parts are often mounted in metal cases. The part of the metal case next to the chassis has tangs or ears which are projections of the case. These ears go through suitable holes in the chassis and are crimped against the chassis to hold the part in place. See Fig. 3. Electrolytic capacitors are often mounted in similar fashion except the ears are twisted after passing through the chassis.

After mounting, ears may be used for soldering lugs.

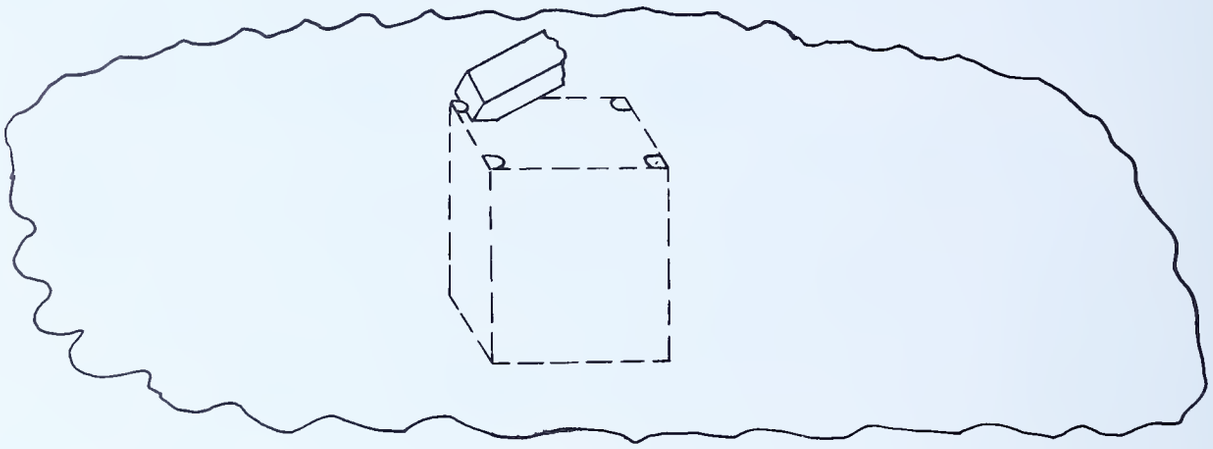

FIG. - 3

Procedures:

A. Crimped ears

1. Make sketch and remove wiring associated with part.
2. Place chassis so chisel can be applied under the end of the ears.
3. Adjust wiring so that operation will not injure insulation or wire.
4. Support chassis in a rigid position.
5. Hold chisel with point under tang as shown in sketch and strike lightly with hammer.
6. Straighten ear until perpendicular to chassis using chisel, hammer, and slip-joint pliers.
7. Straighten other ears and remove part.

B. Twisted ears

1. Sketch location and wiring of part.
2. Disconnect wires from twisted ears and capacitor terminals.
3. Remove excess solder from twisted ears.
4. Straighten ears with slip-joint pliers and remove part.

CONDITIONS FOR DISCARDING PARTS

General Information:

Most parts are replaced when found defective. Some parts may be repaired if the fault is of a minor nature. Any broken leads on parts should be replaced by splicing a new wire of the same gauge to the old wire and re-connecting to the proper terminal. See Reference HH, "Wire Splicing".

Metal parts may be cleaned using carbon tetrachloride and a soft cloth. Sandpaper (#00) will remove stains on unpainted metal surfaces. Switch contacts and sliding contacts can be readily cleaned by applying carbon tetrachloride with a small fiber brush. Care should be exercised that hairs from the brush do not remain on contacts. Steel wool is used to clean unpainted metal surfaces where the work is done away from the chassis. A part so cleaned must be thoroughly brushed to remove steel hairs before reinstallation.

The following paragraphs set forth the conditions necessitating replacement of the various units. These are listed under the names of those components.

Resistors

Check with ohmmeter. See Job 8.

Replace resistor if any of the following conditions are true:

(a) Resistor is burned.
(b) Resistor is broken.
(c) Leads are pulled off.
(d) Resistor is not within color coded tolerance.
If resistor has gold band the tolerance is 5%.
If resistor has silver band the tolerance is 10%.
If resistor has no band the tolerance is 20%.

Capacitors

Test with capacitor (condenser) checker. See Job 10. If capacitor checker is not available use an ohmmeter as described in Job 8.

Discard capacitor if:

(a) Shorted
(b) Leaky
(c) Inaccurate to extent indicated in manual's instructions.
(d) Leads are pulled out.

Coils and Transformers

Any part containing windings may be tested in two general ways using an ohmmeter:

(a) Continuity tests are made by connecting the ohmmeter to the terminals of a winding. If the meter shows a reading, the winding has a complete circuit and tests good for continuity. The test prods should be held firmly on the coil terminals for a good electrical connection. If the needle of the meter does not hold steady, the windings or leads of the coil may have an intermittent connection. If this condition cannot be repaired, the unit must be replaced. If the resistance of the coil is known, the winding should be checked for resistance as well as for continuity.

(b) Short tests are made by connecting the ohmmeter between one winding and another, or between a winding and the frame. In this case a reading should not be obtained as such a reading indicates a connection where none was intended. The proper terminal connections of the individual windings or other internal circuits of the part should be determined before any tests are made. See Job 8.

Radio Frequency (R-F) Coils

Check with ohmmeter as indicated on sketch. See Job 8.

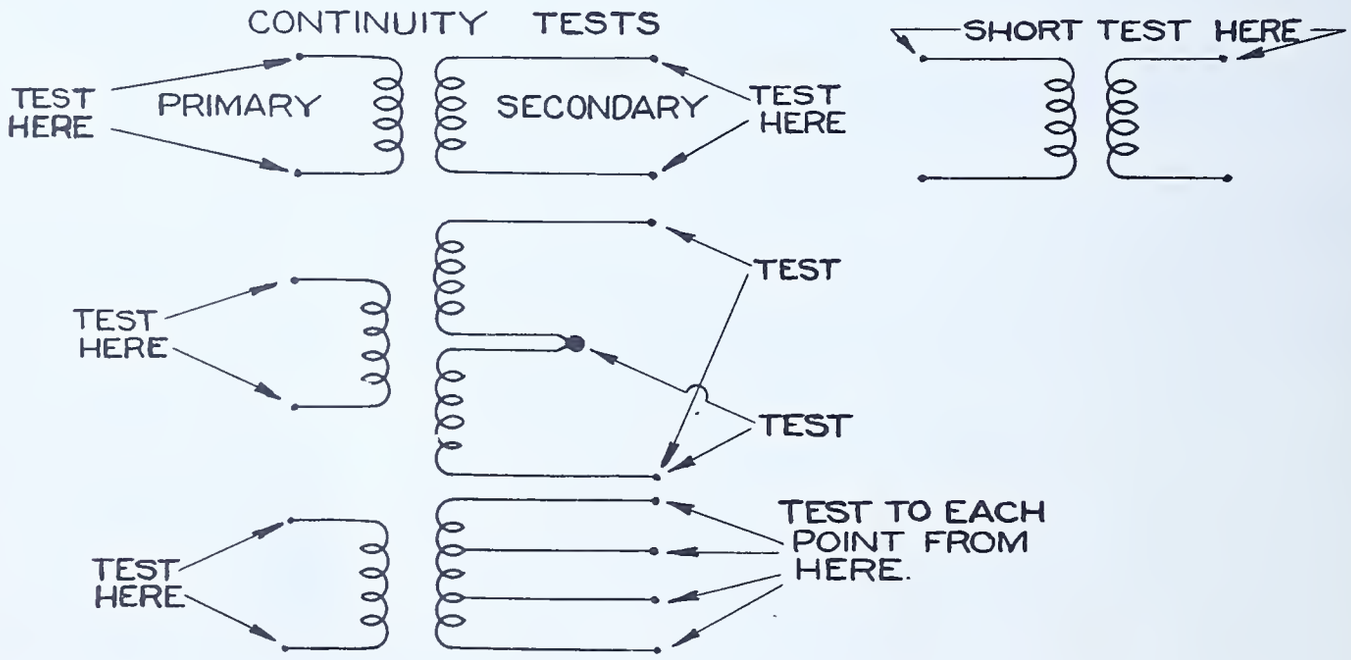

FIG.-4

Radio frequency coil is defective and should be replaced or repaired when:

(a) A winding or portion of winding tests "open". (An "open" is indicated when no reading is obtained.)
(b) Reading is obtained between primary and secondary.
(c) The winding is damaged.
(d) Terminals are broken beyond repair.

Intermediate Frequency Transformers - I-F Coils

Check with ohmmeter as indicated on sketch. See Job 8.

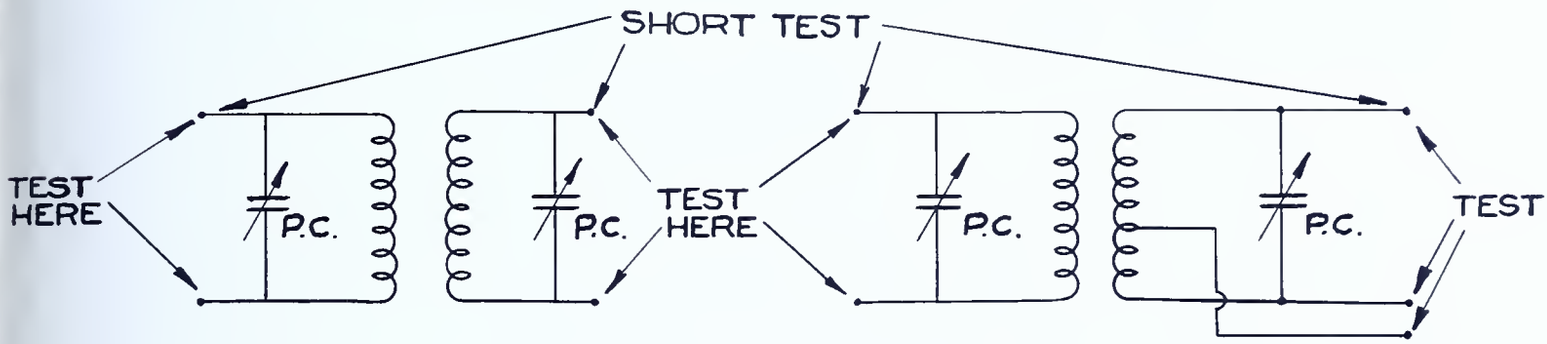

Note: Color code may help in determining windings.

Intermediate frequency transformer should be replaced if:

(a) A winding tests open.
(b) A reading is obtained between primary and secondary.
(c) Coil is damaged.
(d) Terminals are broken beyond repair.
(e) Padding capacitor is shorted, open, or damaged in some way. (Test each padding capacitor as shown in Fig. 10. Page 221.)

Volume and tone controls

Check with ohmmeter as indicated

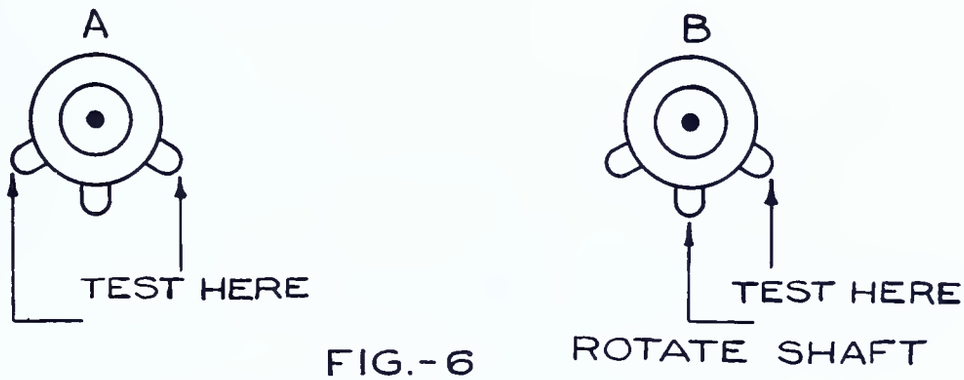

FIG.-6

Control should be replaced if:

(a) Control checks open. See Fig. 6, A.
(b) An open is indicated at any point while the shaft or knob of control is turned. See Fig. 6, B.
(c) The control is broken.

Power Transformers

Check with ohmmeter as indicated for continuity. Check from each winding to every other winding and to the core for short.

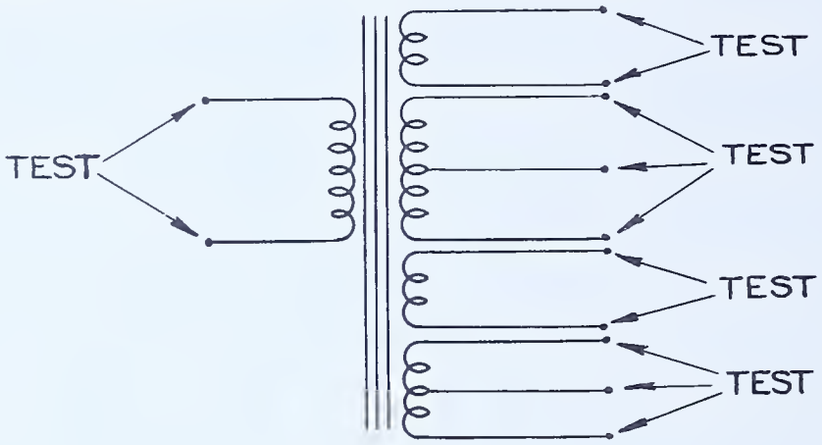

FIG.-7

Discard transformer if:

(a) A winding checks open.
(b) One winding checks shorted to another.
(c) Leads are pulled out of transformer.
(d) Transformer looks and smells as if it were burnt. Color code may be used to determine windings if leads are color coded properly.

Audio Frequency Transformers

Check with ohmmeter as indicated for continuity. Check from each winding to every other and to the core for short.

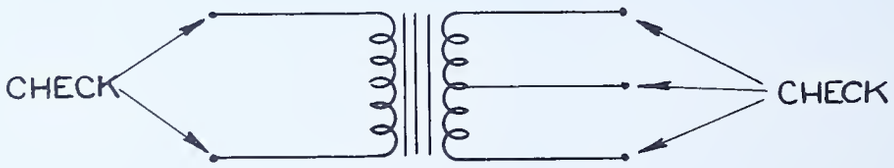

FIG.-8

Discard unit if:

(a) Winding checks open.
(b) Needle of ohmmeter does not remain steady after once indicating a certain resistance.
(c) Leads are pulled out.
(d) Transformer is damaged.
(e) One winding checks shorted to another or to the core.

Jacks and Relays

Check using ohmmeter.

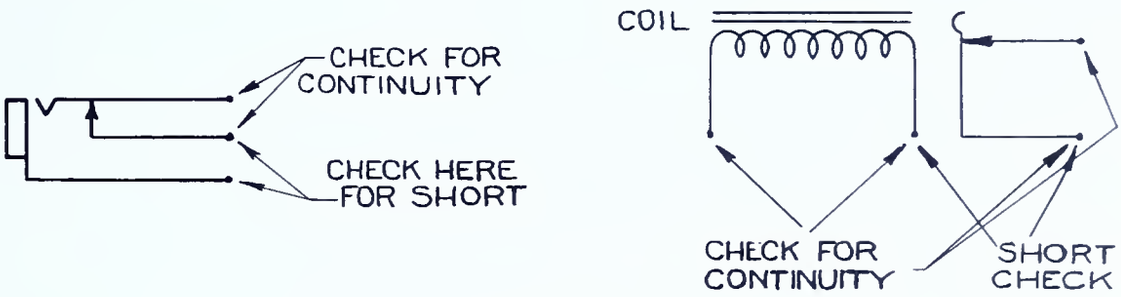

FIG.-9

Discard unit if:

(a) Contacts are burned beyond repair.
(b) Coil of relay is open.
(c) Unit cannot be adjusted to effect a repair.

Repair unit if:

(a) Contacts can be cleaned and adjusted.

Tuning Capacitor:

Connect ohmmeter between rotor and stator plates.

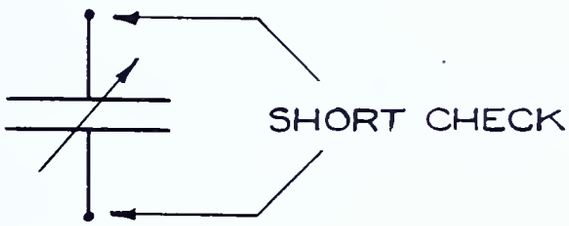

FIG.-10

Rotate rotor plates. Ohmmeter should not read. If it does, straighten the plates so they do not touch when meshed.

Discard capacitor if:

(a) Plates cannot be aligned to prevent touching.
(b) It is broken.

Switches

A. Toggle Switch

(1) Test for continuity when switch is closed("on").
(2) Test for infinite resistance when switch is open ("off").
(3) Open and close switch several times to be sure switch is operating properly.
(4) Shake the switch toggle when in both the off and on position.

Discard switch if there is erratic motion of the ohmmeter pointer during test in Step 4.

B. Selector Switch

Test with ohmmeter for continuity between each independent switch arm and its several contacts. Do this on all the several decks or sections of the switch. See Job 8.

Discard switch if:

(1) Cleaning dirty contacts with a soft fiber brush and carbon tetrachloride does not restore continuity.
(2) Contacts are broken, missing, or badly bent.
(3) Deck or wafer is broken.
(4) "Wiping" contact is missing.

WIRE SPLICING

General Information:

Splices are used to join two wires for the purpose of making a connection which is electrically and mechanically secure without using a mechanical fastening device. Splices should be soldered to assure continued good contact.

There are several types of splices used in radio work. These splices are employed in making connections to antennas, repairing broken antenna wires, or in repairing leads of parts of radios. In chassis wiring splices are avoided where possible, nearly all junctions being made to soldering lugs called "tie points".

The bared ends of the wire must be thoroughly cleaned before the splice is made. No dirt, grease or wax should be allowed to come in contact with the cleaned portion of the wire during the making and soldering of the splice.

Insulation must be restored after splicing insulated wires. This is done by applying tape after the soldering operation is completed.

The Western Union splice is used where solid wire or stranded wire of a few strands is joined to make a connection that will stand considerable strain.

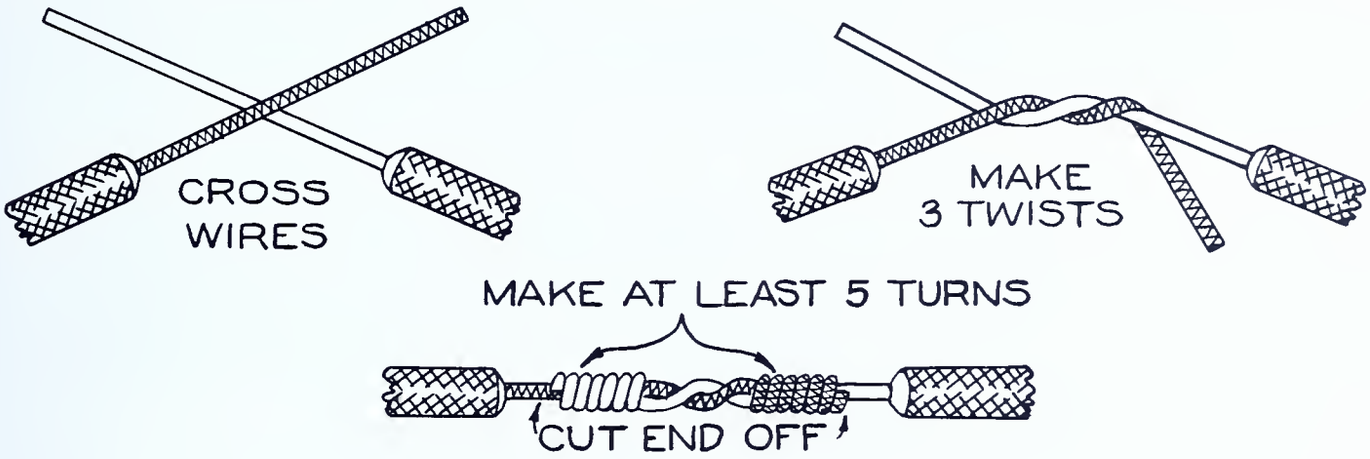

"WESTERN UNION SPLICE"

FIG.-11

The Pig Tail or Twist splice is used where no strain is put on the connection and the closeness of wiring makes other splices difficult.

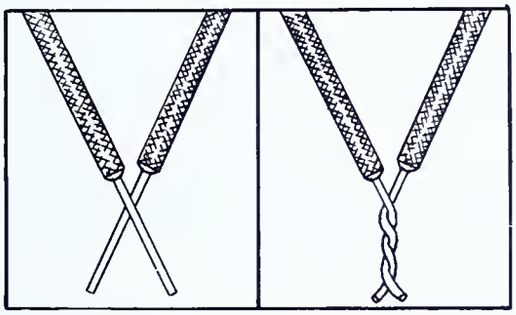

PIG TAIL SPLICE

FIG. 12

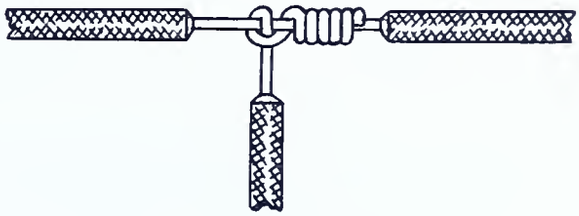

TAP SPLICE

FIG. 13

The tap or "T" splice is used where one wire is connected to a section of another wire as illustrated in Fig. 13. The tap splice is not used at the end of the two wires. This splice might be used to connect a lead-in wire to an antenna.

REINSTALLATION OF PARTS

General Information:

Before mounting any part, the sketch of its original mounting and wiring should be studied to make certain the proper reinstallation of the part.

Parts mounted as follows should be replaced as described:

Machine screws and nuts

Mount as previously installed. Use lock washers as before.

Rivets

Remount the parts using machine screws, nuts and lock washers. A $\frac{1}{4}$" 6-32 round head brass screw can be used to replace the usual rivet. Drill out mounting holes if necessary to admit this machine screw.

Tangs or ears

Crimped type ears - straighten ears so that part readily fits into place on chassis, ears projecting through proper holes. Place block of wood under the part for support.

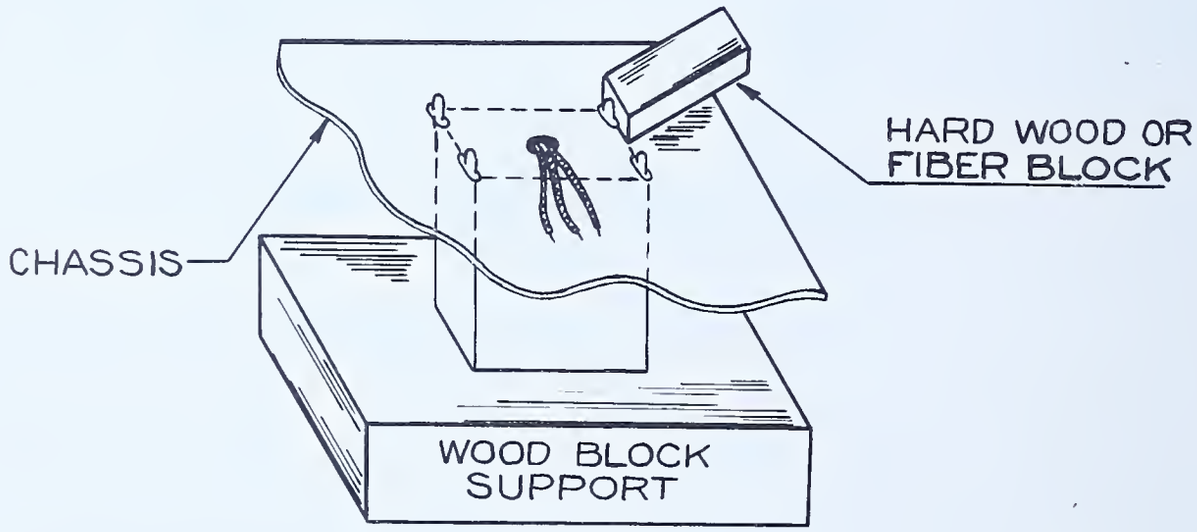

FIG.-14

Place hard wood or fiber block against ear as shown and strike with hammer. Block should be placed so ear flattens against chassis into former position. All ears should be crimped in this manner.

Twisted type ears - straighten ears. Fit part into former position. Grasp ear with slip-joint pliers and carefully make one-quarter turn in clock-wise direction.

REMOVAL AND REINSTALLATION OF PARTS

General Information:

Any radio is composed of a number of individual parts mounted on a chassis and properly wired. These parts may become defective or damaged and this necessitates their repair or replacement.

Radio parts are easily damaged by rough handling. Extreme care must be exercised so that terminal leads and parts are not broken.

Only one part at a time should be removed. This part should be cleaned, tested and reinstalled before another part is removed. If the receiver is in working condition, it should be operated after each part has been removed, checked and replaced.

Specifications:

Remove and reinstall individually, the following parts: resistors, capacitors, coils, r-f and i-f coils, volume and tone controls, tuning capacitors, switches, power transformers, jacks, and relays.

Tools needed:

1. Soldering iron
2. Screw driver
3. Long nose pliers
4. Diagonal cutting pliers
5. Brush, $\frac{1}{2}$", stiff fiber
6. Pick
7. Open end wrenches
8. Socket wrenches
9. Combination slip-joint pliers
10. Machinist's hammer

Materials needed:

1. Solder
2. Cloth, soft
3. Push-back wire
4. Spaghetti tubing
5. Old radio receiver
6. Assorted terminal strips to replace broken ones
7. Box to hold removed hardware
8. Box to hold removed parts
9. Paper, pencil and crayons
10. #00 Sandpaper
11. Carbon tetrachloride

Equipment needed:

1. Ohmmeter
2. Capacitor checker

Procedure:

1. Determine the part to be removed.

2. Make sketches showing the position, location and wiring of this part. Have sketches checked by instructor.

   Note: Similar sketches should be made for any other parts which affect the accessibility of the "wanted" part, since the removal of these parts may be necessary to prevent breakage or burning of adjacent parts.

3. Determine the simplest order in which to remove wires.

4. Heat soldering iron.

5. Heat the first connection to be opened.

6. Unwind wires from terminals with a pick while solder is molten.

7. Remove excess solder by heating and brushing off. Do not get solder onto adjacent parts; remove any that may fall there.

8. Repeat procedure (Steps 5-7) for each connection. It is best to unsolder as many wires as possible before removing mounting screws.

9. Loosen nuts and screws from the mounted part. If parts are riveted or mounted by metal "ears", follow References FF and JJ.

10. Remove carefully all nuts and screws; place into hardware box.

11. Remove the part and clean each wire end or terminal by heating it and then brushing or wiping off the excess solder.

12. Straighten wire ends, using a pair of long nose pliers.

13. Inspect part for broken leads, mutilation, or other visual damage.

14. Test part with appropriate tester. See Jobs 8 and 10.

15. Clean parts which test "satisfactory" as instructed in Reference GG.

16. Splice to replace broken portions of wire leads with same gauge and type of wire.

17. Reinstall (or replace) part into chassis. Use same nuts, screws, and lockwashers. Follow sketch carefully. Replace rivets with machine screws and re-bend "tangs".

18. Replace and solder wire leads, reversing sequence noted for Step 3. Where two or more wires connect to the same terminal, crimp all wires to the terminal before soldering. All work should have a neatly finished appearance.

19. Replace all adjacent parts.

20. Inspect work for continuity and shorts by appropriate test procedure.

21. Submit for inspection.

QUESTIONS

Place the answers to these questions in your notebook or on form as directed by instructor.

1. Why should a part be "sketched" before removal?
2. What should be included in the sketch?
3. How should the color of leads be placed on sketch?
4. What must be done beside removing solder to free terminal wires?
5. How are rivets removed?
6. On which end of rivet should one start this operation?
7. When is a center punch necessary in removing a rivet?
8. What precautions should be taken in removing a unit?
9. What are "tangs"?
10. How are parts so mounted removed?
11. How are they remounted?
12. What is a "twisted tang"?
13. How are they removed?
14. How are they remounted?
15. What type tang is also used as a soldering terminal?
16. Describe the procedure and materials used in cleaning parts.
17. How is a continuity test made?
18. How does one test for short circuits?
19. Prepare a form as shown on next page for each part named. Use two pages making each block two inches deep.

References:

Watson, Welsh and Eby, Understanding Radio, pp. 171-175.

FIRST PAGE

Part	Instrument to be used	Schematic Diagram for test	Conditions necessitating discard
1. Resistor			
2. Capacitor			
3. R-F Transformer			
4. I-F Transformer			

DO NOT WRITE IN THIS CHART

SECOND PAGE

5. Power Transformer			
6. Audio Frequency Transformer			
7. Volume Controls			
8. Switches			

COPY FORM IN NOTEBOOK

JOB 13

COIL WINDING AND REPAIR

All receivers and transmitters employ coils in radio frequency circuits. These coils are often delicate in structure and are easily damaged. The capable radio service man must have the ability to recognize the various types of coils and to repair them. This may even constitute rewinding of the coil. Careful attention to the size, type and number of turns of wire as well as the position of wire endings is of great importance in this work.

COIL WINDING AND REPAIR

General Information:

Radio frequency coils are used in radio frequency circuits to provide inductance. There are many applications and physical forms of these coils. They may consist of one or more windings. A winding is made from one or more turns of the same piece of wire. Those having only one winding with connections only at each end are generally called r-f choke coils; those having more than one winding are called r-f transformers.

Radio frequency chokes are machine wound and usually have one length of wire wound in several layers, one on top of the other in special fashion. See Fig. 1. This type of winding if defective can usually be replaced by "scramble" winding an equal number of turns of the same type and size wire in its place. To scramble wind a coil, the wire is wound on at random to fill the same approximate space as occupied by the original winding. Care should be exercised that the wire is not kinked as it is wound.

FIG.-1

Radio frequency transformers usually contain two windings. One is called the primary and the other the secondary.

Primary windings are of two types, high impedance and low impedance. The high impedance winding always has a greater number of turns than the secondary while the low impedance primary has considerably fewer turns than the secondary.

High impedance primaries are wound in the same fashion as choke coils and are located at one end of the secondary. See Fig. 2. Sometimes the high impedance primary is located inside the form on which the secondary is wound. A scramble wound coil of the same number of turns and type wire may be used to replace a defective high impedance primary.

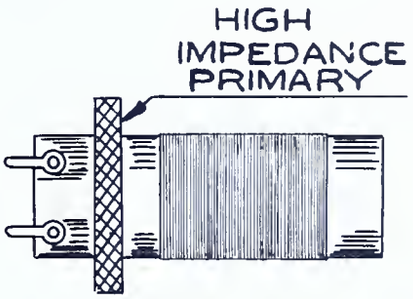

FIG.-2

Low impedance primaries are usually wound over one end of the secondary winding. See Fig. 3. Some form of insulation such as treated paper or celluloid is used between windings. The low impedance winding, having only a few turns, is wound in a single layer, one turn next to the other.

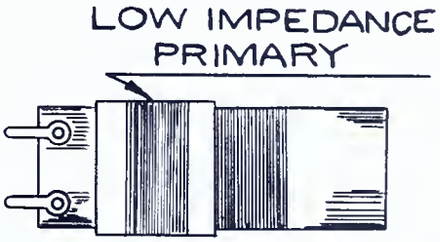

FIG.-3

Secondary windings are usually either bank wound or single layer. See Fig. 4. The single layer secondary is the most common type and is wound so that one turn is next to the other but never overlaps it. Sometimes there is a slight spacing between turns.

BANK WOUND COIL

METHOD OF
BANK WIRING

SINGLE LAYER COIL
OFTEN CALLED SOLENOID

FIG.-4

Coil forms support the wire of the coil. They may be made of wood, paper, fiber, bakelite, ceramic, polystyrene, isolantite or other insulating materials. The last three materials named are used for high frequency coils to reduce losses.

The form may be ribbed, threaded, slotted, or smooth. See Fig. 5. The ribbed and slotted forms permit less of the winding to touch the form and thus reduce losses. The threaded form permits the wire to fall into the thread and thus keeps it in place.

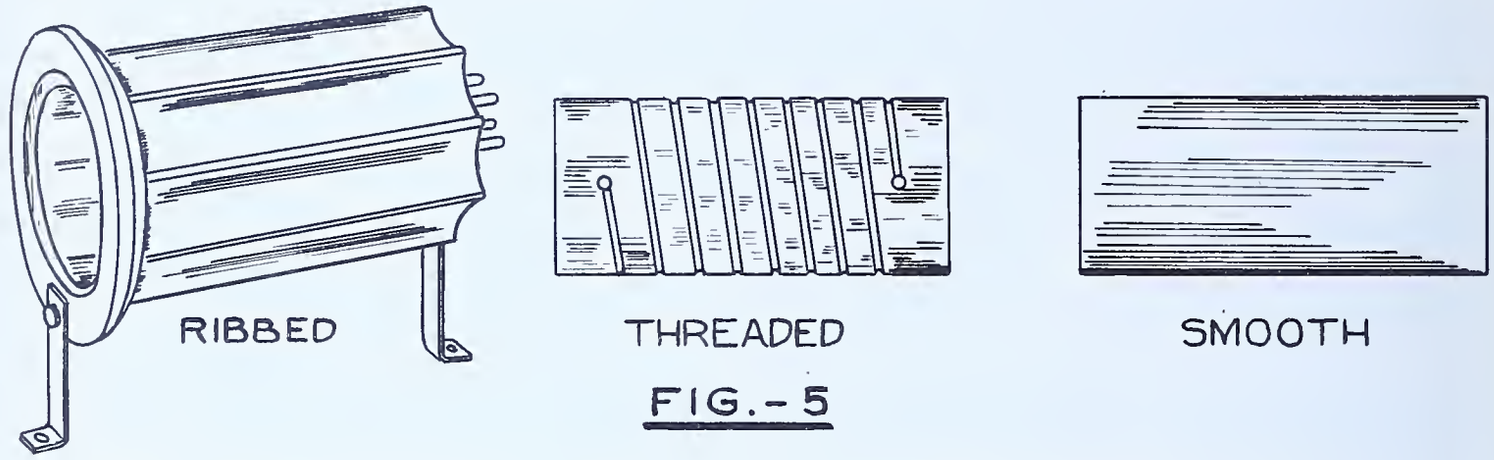

FIG.-5

Small holes are drilled in the coil form to admit the wire at the end of the winding.

Wax or cement is used to hold the windings of the coil in place on the form.

Some coils of heavy wire are wound on forms which are especially made so that they can be removed after the coil is wound. The coil is self supporting when mounted or may use only supporting strips.

The wire at the end of the winding, after going through the hole in the form, is usually terminated at a soldering lug riveted to the coil form. In some coils, the wire ends are soldered to pins or prongs in the mounting base of the coil. This permits the coil as a unit to be removed from its socket and to be replaced by another coil, for the purpose of changing the inductance of the circuit.

It is important that well soldered joints be made at these terminations and that the coil ends be connected to the proper terminals on the form. Care must be taken, however, that too much heat is not applied to the terminals as loosening of the lugs of the pins may result.

Shield cans are often used over r-f coils to isolate the radio frequency field surrounding the coil. See Fig. 6. Failure to use shields as intended usually results in erratic operation of the radio.

Shield cans are usually made of aluminum, copper or some other non-magnetic metal. Magnetic metals, such as iron, introduces losses when used to shield r-f coils.

SHIELD CAN
FIG.-6

Radio frequency coil forms are often secured to the shield can, and mounting screws on the can are used to fasten the entire assembly to the chassis of a radio. In other cases the coil form is mounted on the radio chassis while the shield cans mount in position over the coil. The coil should always be properly centered and rigidly held in the can.

Wire used to wind r-f coils is made of soft drawn copper. Some coils used on high frequencies have silver plated copper wire. This reduces losses. Coils used on the lower radio frequencies often employ litz wire which is composed of several strands of enameled copper wire. This, too, reduces losses.

In gauging wire sizes according to Brown & Sharp (B & S) specifications, the diameter of a wire is indicated by a number. A large diameter wire would have a small number while a wire with a small diameter has a large number. Thus a #36 wire would be very fine while a #10 would be thick. The thickness of a wire is measured by a micrometer. A wire table is then used to find the wire number that corresponds to the reading of the micrometer. See Table of Wire Sizes in Appendix.

Cotton, silk, and enamel covering is used on wire for r-f coils. The following numbers and letters indicate wire sizes and insulation as shown:

#32 S.S.C.- #32 size, single silk covered
#30 D.S.C.- #30 size, double silk covered
#26 D.C.C.- #26 size, double cotton covered
#24 S.S.E.- #24 size, single silk enameled
#22 E #22 size, enameled

In replacing windings on r-f coils, the following items must be carefully adhered to: size of wire, type of insulation, number of turns, direction, length, and diameter of winding, and material and type of form. If any of these factors are varied, the coil must be redesigned.

Iron core r-f coils use a finely powdered iron held together by a binding material in a cylindrical shape. This iron pellet is located in the center of the co

A means of changing the position of the iron core in the coil is often provided. This changes the inductance of the unit.

Physical inspection of coils may disclose many defects.

Inspect the connections from the ends of each winding to its terminal lug; and check the surface of the coil for scratches or imperfections of the insulation on the wire. Mechanical damage to the winding form and mounting as well as loose mountings and damaged shield cans, may also be observed. Such items should be repaired or replaced depending upon the extent of the damage.

The Ohmmeter may be used to test the r-f coil for continuity. See Job 8. In addition, the d-c resistance of the coil may be measured. If the resistance of a coil as specified by the manufacturer is known, any deviation in resistance indicates a defective coil.

The resistance of r-f coils is usually low, varying between a fraction of an ohm and a hundred ohms, depending on the size of the wire and the length of the winding. Radio frequency coils used on high frequencies have few turns of relatively heavy wire. The resistance would therefore be low, perhaps less than an ohm.

A high impedance primary on an r-f transformer designed to operate on the lower frequencies would have many turns of small wire and might measure 50 ohms. Radio frequency choke coils wound with many turns of fine wire might measure 100 ohms.

Specifications:

Job (a) Repair by rewinding single layer air core (r-f) coils as obtained from stock room.

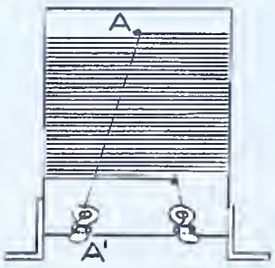

FIG.-7

Job (b) Construct for use in Job 16 an r-f coil as follows:
36 turns #22 D.C.C. wire
coil to be tapped at 24th turn
coil form - plug in type,
$1\frac{1}{2}$" diameter, 5 prong base
drilled as indicated using #50 drill

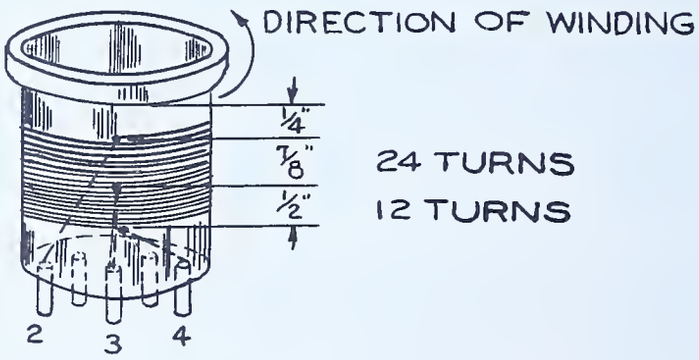

FIG.-8

Tools needed:

1. Micrometer
2. Soldering iron
3. Long nose pliers
4. Diagonal cutters
5. Hand drill, #50 drill

Equipment needed:

1. Ohmmeter

Materials needed:

1. Service cement with applicator
2. Alcohol or carbon tetrachloride
3. Wire - Job (a) - Duplicate wire of old coil
   Job (b) - #22 D.C.C.
4. 6 r-f coils
5. 1-$1\frac{1}{2}$" x 3" 5 prong coil form
6. Small cloth for cleaning

Procedure:

A. Repair r-f coils

1. Obtain tools, materials, and equipment from stock room.

2. Check the six r-f coils for resistance. Number each coil in pencil and tabulate resistance of each in notebook. Use copy of form on Question Sheet.

3. Separate good coils (those which show continuity and are not damaged) from defective coils (those which test open or are damaged). In the repair of a defective coil, such as in Fig. 7, proceed as follows:

4. Make a sketch of coil indicating:
   (a) terminal connections
   (b) length of winding on the coil form
   (c) type and direction of the winding
   (d) spacing of the winding
   (e) number of turns in the winding

5. Remove defective winding from coil form and clean the form using alcohol or carbon tetrachloride and a soft cloth.

6. Measure diameter of old wire with micrometer. (Remove insulation before measuring.)

7. Consult Wire Table in Appendix for size wire which corresponds to the diameter.

8. Obtain proper wire from stock room.

9. Wash and thoroughly dry hands before proceeding with coil winding. The appearance and efficiency of the coil is affected by dirt and moisture.

10. Remove $\frac{1}{2}$" insulation from end of wire.

11. Insert end of wire through hole A as shown in sketch.

12. Place end of wire through the same hole by which the terminal lug is fastened to the form, and wrap wire around this lug.

13. Solder this connection. A'.

14. Wind wire on form in same direction as original coil as follows:
    a. Hold form by its end in the left hand and the wire in the right hand.
    b. Rest coil form on knee.
    c. Wind form by turning it toward you, keeping tension on the wire held in the right hand. Be sure wire does not kink.
    d. Wind the same number of turns as on original coil. Keep spacing (if any) between the turns the same as on the original winding.

15. Cut wire about six inches beyond the point of the last completed turn.

16. Insert this end of wire into hole provided for termination of winding.

17. Connect and solder wire to lug as indicated in sketch made in Step 4.

18. Check coil for resistance, using ohmmeter. Tabulate results in notebook on form as shown in Step 2.

19. Present each coil when checked to the instructor for inspection.

20. Apply thin coat of service cement to completed coil when approved. Allow coil to dry before moving.

21. Repeat procedure with each defective coil.

B. Construct r-f coil

1. Layout and drill coil form as indicated in specification sketch, Fig. 8. If coil is already drilled use convenient holes.

2. Remove $\frac{1}{2}$" insulation from end of #22 D.C.C. wire.

3. Insert end of wire through top hole from the outside and push it through the #2 pin of the base; long nose pliers may assist this latter process.

4. Solder wire in pin. (See Job 1, Page 18.)

5. Wind the specified 24 turns of wire on form in direction indicated. Keep wire tight and hold firmly in place.

6. Cut wire 3 inches beyond the point of completing the last turn.

7. Remove $1\frac{1}{2}$" insulation from end of wire.

8. Insert end of wire into second hole of coil form.

9. Push this end down through the #3 pin in base.

10. Pull wire tight through this pin using pliers, and bend over end to hold temporarily.

11. Remove $\frac{1}{2}$" insulation from another wire (as it comes from spool).

12. Push end of this wire through the second hole in the coil form and out through the #3 pin; thus paralleling the wire of the coil which went through at these points.

    Be sure that the insulation as well as the wire goes through the hole in the form.

13. Solder both wires in the #3 pin.

14. Wind 12 more turns of wire on the coil form, in the same direction as the first winding.

15. Cut wire 3 inches beyond completion point of twelfth turn.

16. Remove 2 inches of insulation from end of wire.

17. Push end of wire through bottom hole in coil form and through #4 pin in base.

18. Pull wire tight and bend over.

19. Solder wire in pin.

20. Test coil for continuity.

21. Submit to instructor for inspection.

22. Apply one coat of service cement to winding.

23. Keep coil for use in Job 16.

QUESTIONS

Place the answers to these questions in your notebook or on form as directed by instructor.

1. In what circuits are r-f coils used in a radio?
2. What is the function of the coil in that circuit?
3. What are coils having only one winding called? Two windings?
4. What sort of winding may be replaced with a scramble wound coil?
5. If an r-f transformer has two windings what is each called?
6. What is the difference between a high and a low impedance primary?
7. Where is a high impedance primary found on an r-f transformer? a low impedance primary?
8. Name two types of windings that might compose a secondary winding.
9. Where might a polystyrene coil form be used instead of a paper form? Why?
10. What is the purpose of a ribbed coil form? a threaded coil form?
11. What is sometimes used to hold a winding in place on a coil form?
12. Are all coils mounted on forms?
13. How may the wire of the winding be terminated?
14. What is the advantage of having pins or prongs on a coil form?
15. Why are shield cans used?
16. Of what material is a shield can made?
17. When is silver plated copper wire used for winding coils? Why?
18. What is litz wire? Why is it used?
19. Name three types of insulation used on wire in r-f coils.
20. How is the size of wire indicated?
21. What does #32 D.S.E. mean?
22. Are all r-f transformers air core?
23. Name five things the sketch of a coil should indicate.

References:

Ghirardi, A. A., Radio Physics Course (Second Edition), pp. 586-614.

Watson, Welsh and Eby, Understanding Radio, pp. 367-396, 419-420.

The Radio Amateur's Handbook, A.R.R.L., Chapter on Receiver Construction.

TABULATION FORM

Resistance Check - Step 2 of Procedure A

Coil#	Resistance Pri.	Resistance Sec.	Resistance Rewound
1			
2			
3			
4			
5			
6			

JOB 14

A SIMPLE POWER SUPPLY

The power supply is a unit designed to change power from an available supply of electricity to that form suitable for the operation of radio equipment.

A SIMPLE POWER SUPPLY

General Information:

A high voltage direct current is necessary for the operation of vacuum tubes in a radio and can be obtained from batteries or from a power supply.

The power supply is connected to an alternating current source and changes this to direct current. In addition, low voltage a-c is supplied from the power unit to light the filaments of the tubes. The high voltage potential is called the "B" supply while the filament or heater voltage is called the "A" supply.

The essential parts of a power supply are: a power transformer, a rectifier tube, filter capacitors, a filter choke, and a voltage divider.

The primary of the power transformer is connected through the on-off switch to the a-c line.

The high voltage secondary winding is connected to the rectifier tube where this voltage is rectified from a-c voltage to pulsating d-c voltage.

The filter capacitors and filter choke change the pulsating voltage to the smooth d-c voltage necessary for the radio.

The voltage divider is a tapped resistor connected to the filtered output of the unit in order that various values of voltage may be obtained. This unit is also called a "bleeder" because a certain amount of current is drained by it from the total output.

Filter capacitors are generally of the electrolytic type and must be wired so the side of the capacitor marked positive is connected to the positive part of the filter circuit. This would be the filament of the rectifier tube or the associated circuit connected to the filament. The negative lead from the capacitor is connected to the center tap of the high voltage winding on the power transformer which is the negative part of the filter circuit.

The amount of voltage and current that a power unit can supply depends on the windings and size of the power transformer, the rating of the rectifier tube, and the design of the filter system.

The following precautions must be observed in working with power supplies:

(a) Handle wiring or terminals only while unit is off. High voltages, possibly fatal, are encountered.

(b) Connect power supply only into the outlet which provides the proper voltage, type of current, (and frequency, if alternating current).

(c) Avoid shorting d-c output of power supply. This results in excessive current through the unit and probable destruction of rectifier tube.

(d) Always check d-c voltages immediately after turning on unit.

(e) Disconnect a power supply from which no d-c is available or if plates of rectifier tubes get red hot. This may indicate a shorted capacitor.

(f) Discharge filter capacitors through a 1000 ohm resistance before handling wiring or terminals after unit is turned off. Capacitors store electricity and may discharge through the body causing severe shock.

Specifications:

1. Chassis to be laid out and constructed. The chassis made in Job 5 cannot be used for this job. Mount parts as indicated by bottom view of chassis, Fig. 1. Since size of available parts varies the exact dimensions for mounting parts are not included.

2. Cut-out portions of chassis must be of sufficient size to admit parts and to prevent terminals from shorting to chassis; 1/8" is a convenient clearance distance.

3. Wiring to be connected according to schematic diagram, Fig. 2. Wiring to be dressed according to wiring layout, Fig. 1.

4. Cables to be formed, laced, and dressed against chassis as indicated in wiring layout.

5. Taps on voltage divider to be adjusted for 250 volt, 100 volt, and 50 volt output.

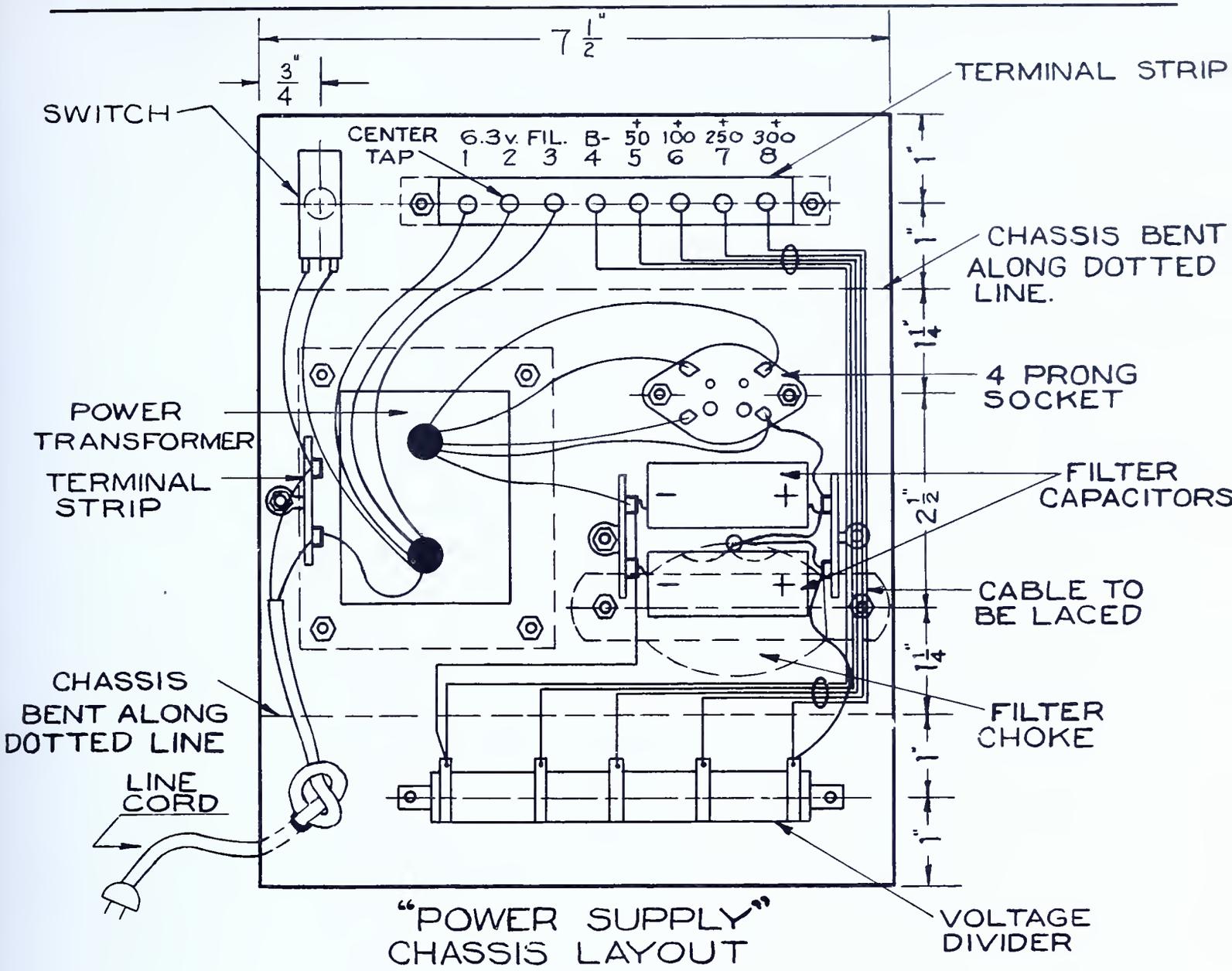
7 1/2"
3/4"
TERMINAL STRIP
SWITCH
CENTER TAP
6.3v. FIL.
B-
+50
+100
+250
+300
1 2 3 4 5 6 7 8
CHASSIS BENT ALONG DOTTED LINE.
4 PRONG SOCKET
POWER TRANSFORMER
TERMINAL STRIP
FILTER CAPACITORS
CABLE TO BE LACED
CHASSIS BENT ALONG DOTTED LINE
FILTER CHOKE
LINE CORD
VOLTAGE DIVIDER
"POWER SUPPLY" CHASSIS LAYOUT

FIG. 1

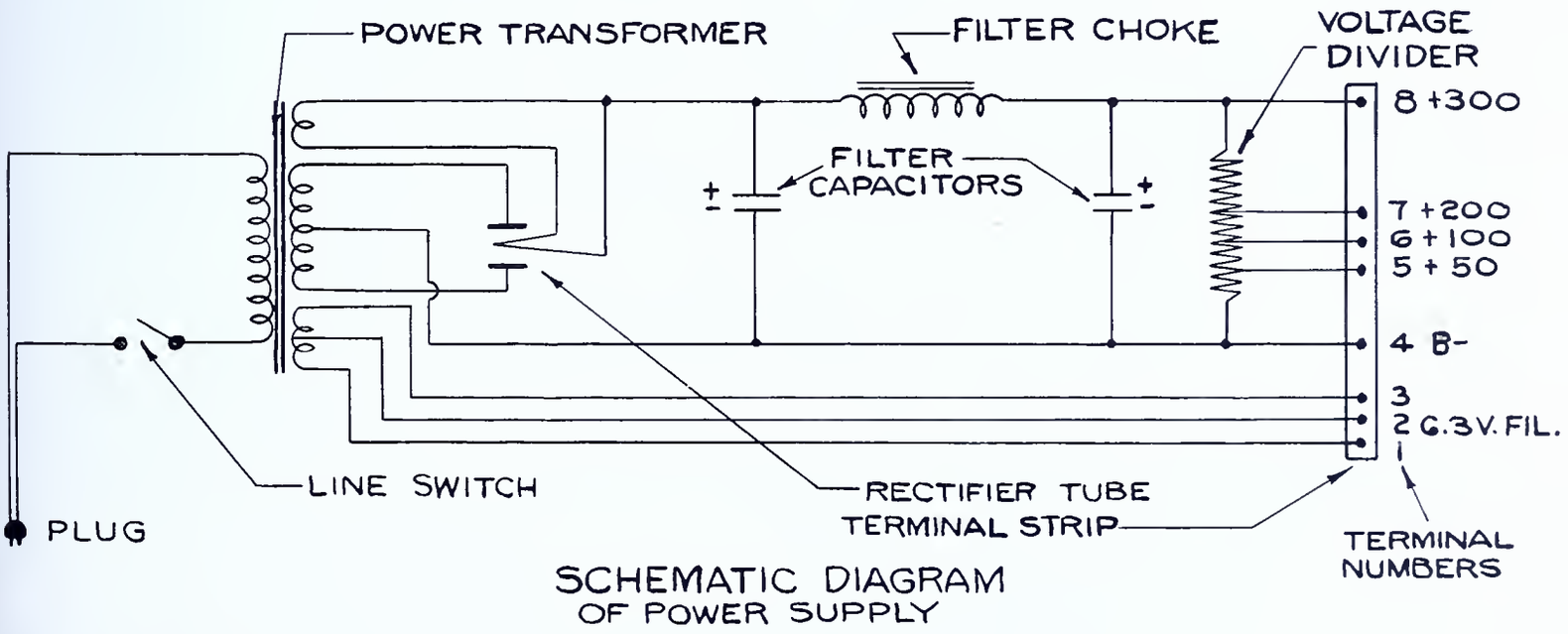
POWER TRANSFORMER
FILTER CHOKE
VOLTAGE DIVIDER
8 +300
FILTER CAPACITORS
7 +200
6 +100
5 + 50
4 B-
3
2 6.3V. FIL.
1
LINE SWITCH
RECTIFIER TUBE
TERMINAL STRIP
PLUG
TERMINAL NUMBERS
SCHEMATIC DIAGRAM OF POWER SUPPLY

FIG. 2

Tools needed:

1. Soldering iron
2. Diagonal cutters
3. Long nose pliers
4. Screw driver
5. Hand drill
6. Twist drills - set
7. 1-1/8" socket punch
8. Mill file, 10"
9. Cold chisel
10. Steel rule
11. Dividers
12. Scriber
13. Center punch
14. Ball peen hammer
15. Vise
16. Open end wrench to fit socket punch

Equipment needed:

1. Multi-range voltmeter, a-c, 0 - 15, 150, 750 volts or similar
2. Voltmeter, d-c, 0 - 500 volts or similar
3. Ohmmeter
4. Capacitor tester
5. Tube tester

Materials needed:

1. Rosin core solder
2. Push-back wire
3. 11-1/4", 6-32 round head machine screws
4. 11-6-32 hex nuts for above screw
5. 11-Lock washers for 6-32 screw
6. 1-Metal chassis - 5" x 7½" x 2" made specifically for this job from 9" x 7½" x #20-22 USS galv. sheet metal
7. 1-8 connection terminal strip with screw connections
8. 3-2 lug terminal strips (for tie points)
9. 1- on-off switch (single pole, single throw toggle for 110 v)
10. 1- Line cord with plug
11. 1-15 henry 75 M.A. filter choke
12. 1-4 prong socket (for rectifier tube)
13. 1- Type 80 tube, rectifier
14. 2-8 mfd. 450 volt capacitors
15. 1-25,000 ohm, 50 watt wire wound resistor with 3 sliding taps
16. 1- Power transformer
    105-125 volt 60 cycle primary
    5 volt - 2 amp. secondary
    6.3 volts - 2 amp. secondary
    600 volt - 70 M.A. center tapped secondary

Procedure:

1. Obtain tools and materials from stock room. Get equipment from stock room as needed and return immediately after used.

2. Determine location of parts on chassis. See specifications for layout of parts on chassis.

3. Layout chassis for parts. See Job 5 on chassis fabrication.

4. Drill holes in chassis for mounting parts.

5. Punch holes for power transformer, rectifier, and voltage terminal strip. Use socket punch to cut hole for rectifier tube.

6. Check leads of power transformer for resistance using color code and ohmmeter. Tabulate results in notebook on copy of form found on Question Sheet. Check resistance of voltage divider.

7. Mount all parts on chassis except capacitors.

8. Make a wiring diagram from schematic diagram. Have diagram checked by instructor.

9. Wire and solder the leads from the power transformer to their respective terminals. Follow diagram carefully.

   Note: Look up socket connections of #80 tube in tube manual.

10. Connect and solder line cord to unit.

11. Connect and solder wire from switch to line terminal, completing wiring of primary circuit of power transformer. Have instructor check wiring.

12. Connect plug on line cord to 105-125 volt a-c supply.

13. Turn switch on.

14. Check following voltages using a-c voltmeter. Tabulate results in notebook on same form as used for Step 6.

    a. Primary (use 150 volt scale)
    b. High voltage secondary (750 volt scale)
    c. 6.3 volt winding (15 volt scale)
    d. Rectifier filament (15 volt scale)

    Note: Extreme care should be exercised in checking voltages not to hold or even touch metal parts of test leads. High voltages are dangerous. Use only one hand in testing.

    If in doubt about which scale of voltmeter to use, use highest scale first. If reading is very small, use a lower scale for a more accurate reading.

15. Disconnect power supply from line.

16. Test filter capacitors for capacity and leakage. Tabulate results in notebook on copy of form found on Question Sheet.

17. Mount filter capacitors between terminal strips as shown in specifications. Make sure polarity is as shown. Do not solder capacitor leads to terminals until other wires to same terminals have been connected.

18. Wire and solder remaining wires as shown in specifications. Have instructor check wiring. Make sure terminal numbers on schematic diagram correspond to those on wiring layout.

19. Form and lace cables as shown in specifications.

20. Make a resistance analysis according to tabulation form on Question Sheet. Tabulate results in notebook on copy of form.

21. Test the #80 tube in tube tester.

22. Insert #80 tube into socket of power supply.

23. Connect line plug to a-c supply and turn unit on.

24. Check d-c voltages as indicated on tabulation form on Question Sheet. Use 500 volt scale of d-c voltmeter. Tabulate results on copy of form made in notebook.

25. Turn unit off. Adjust taps on voltage divider to obtain required voltages (toward ground end of voltage divider to reduce voltage, toward filter choke end to increase voltage). Set screws holding base of tap must be loosened to move tap; care should be exercised that the screw driver does not slip and gouge the voltage divider.

26. Turn unit on and again check voltages. If voltages are still not correct, make further adjustments of taps on voltage divider.

27. Tighten screws holding taps at correct voltages.

QUESTIONS

Place the answers to these questions in your notebook or on form as directed by instructor.

1. What type of current constitutes the "B" supply? The "A" supply?
2. What does the power transformer do?
3. In what circuit is the "on-off" switch?
4. What is the purpose of the rectifier tube?
5. What is the purpose of the filter capacitors? The filter choke?
6. Why must electrolytic capacitors be connected a certain way?
7. What circuit of the power supply constitutes the positive polarity? The negative?
8. What does the bleeder do?
9. Why is the voltage divider called a bleeder?
10. Why is the voltage from #80 filament to negative higher than the voltage across the bleeder?

References:

Ghirardi, A. A., Radio Physics Course (Second Edition), Chap. 27.

Timbie, W. H., Elements of Electricity (Third Edition), p. 484.

Watson, Welsh and Eby, Understanding Radio, pp. 287-304.

The Radio Amateur's Handbook (Any Edition), A. R. R. L., Chapter on Power Supplie

The Radio Handbook (Any Edition), Editors and Engineers, Chapter on Power Supplie

TABULATION. FORMS

POWER TRANSFORMER - Steps 6 and 14

Points Measured	Ohms Resist.	A-C Voltage
Primary High voltage sec. 5 volt secondary 6.3 volt secondary		

FILTER CAPACITORS - Step 16

No.	Cap. mfd.	Leakage
1		
2		

RESISTANCE ANALYSIS - Step 20

Points measured	Ohms
Across line plug terminals - Snap switch Plate to plate of rectifier tube socket Rectifier filament to B + 300 v " " to B + 200 v " " to B + 100 v " " to B + 50 v " " to B -	

D-C VOLTAGES - Step 24

Points measured	Volts
#80 tube filament to ground B - max. to ground 200 volt tap to ground 100 volt tap to ground 50 volt tap to ground	

JOB 15

AN AUDIO OSCILLATOR

The oscillator is one of the most widely used devices in radio work. Transmitters and most receivers employ a vacuum tube working as an oscillator. In addition, the oscillator (often called signal generator) is one of the most important units of test equipment used in radio servicing.

AN AUDIO OSCILLATOR

General Information:

Mechanical means may successfully generate a-c voltages up to the higher audio frequencies (10,000 cycles per second).

The difficulty of constructing such mechanical devices increases as the desired frequency increases, so that for the generation of higher frequencies, no mechanical unit can be built.

The vacuum tube, however, can be made to generate alternating currents up to the highest limits of the radio frequency spectrum (30,000,000,000 cycles per second or higher). A vacuum tube connected in such a manner as to produce a continual flow of alternating current is called an oscillator.

An audio oscillator is an a-c generator whose frequency is within the range of hearing.

This range includes frequencies between 20 and 20,000 cycles per second, and is known as the audio frequency range.

A vacuum tube acts as an oscillator when energy from the output (plate circuit) is fed back to the input (grid circuit). In order to do this, it is necessary to couple the plate circuit to the grid circuit. This coupling may be either inductive by means of a transformer, or capacitive through a capacitor, or by a combination of both methods.

The frequency of this vacuum tube oscillator depends upon the inductance (L) and the capacity (C) in the plate and grid circuits. See Fig. 2. For this reason, this oscillator may be called an L-C oscillator.

The frequency (number of cycles per second) of the voltage generated, decrease as the value of inductance or capacity is increased. The use of iron in the core of a transformer increases the inductance of the unit and thus results in a lower frequency.

The operation of the oscillator is as follows: When the key, (see schematic diagram, Fig. 2) is depressed (closed), the cathode circuit of the tube is completed so that current surges from B+ through the phones and the primary of the transformer to the plate of the tube and through the tube to B-.

This surge of current induces a voltage in the secondary of the transformer.

The secondary of the transformer is connected to the grid of the tube through a resistor and capacitor. These units permit the necessary voltage for the grid of the tube to be developed.

As the secondary voltage is applied to the grid, it affects the plate current. Oscillations due to changing plate current and induced grid voltage are thus set up.

The phones change the generated electrical impulses to sound waves which can be heard.

Specifications:

1. Construct an audio oscillator of the L-C (inductance - capacity) type.

2. Check and record as instructed the operation of the audio oscillator with the following values of capacitors - 0.1 mfd., .01 mfd., .001 mfd. in grid circuit.

3. Check and record the operation of the audio oscillator with the following plate voltages - 50 volts, 100 volts.

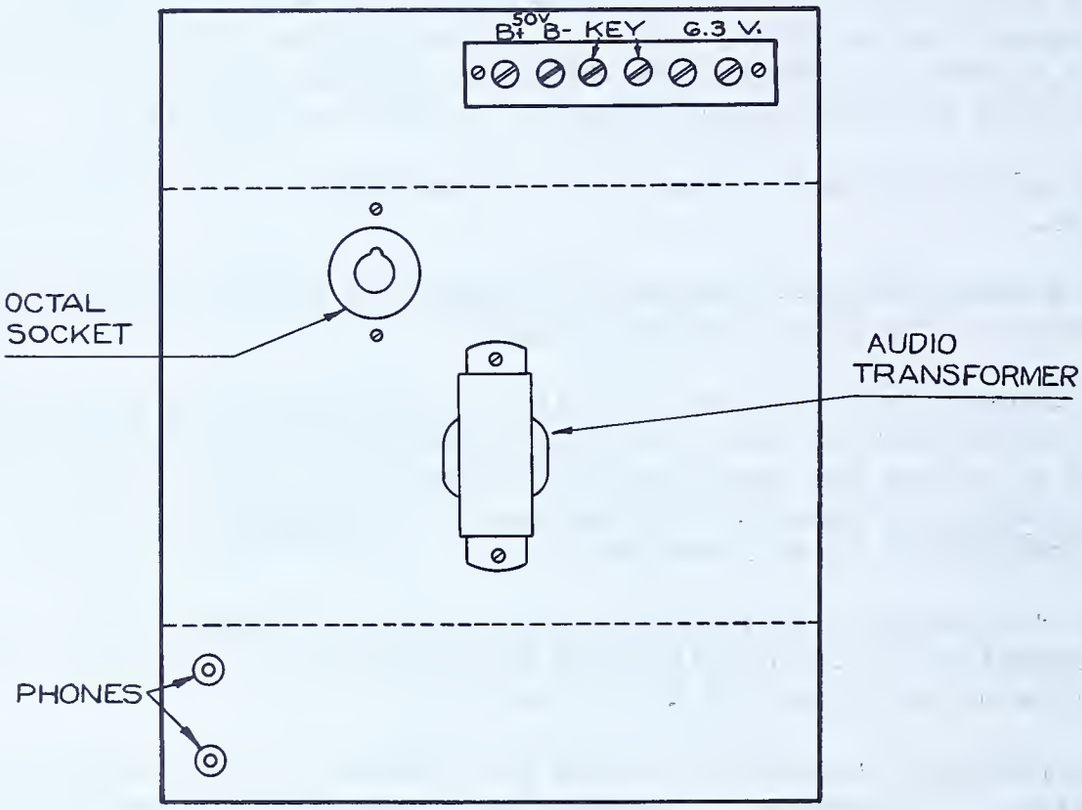

"CHASSIS LAYOUT"
(TOP VIEW)

FIG. 1

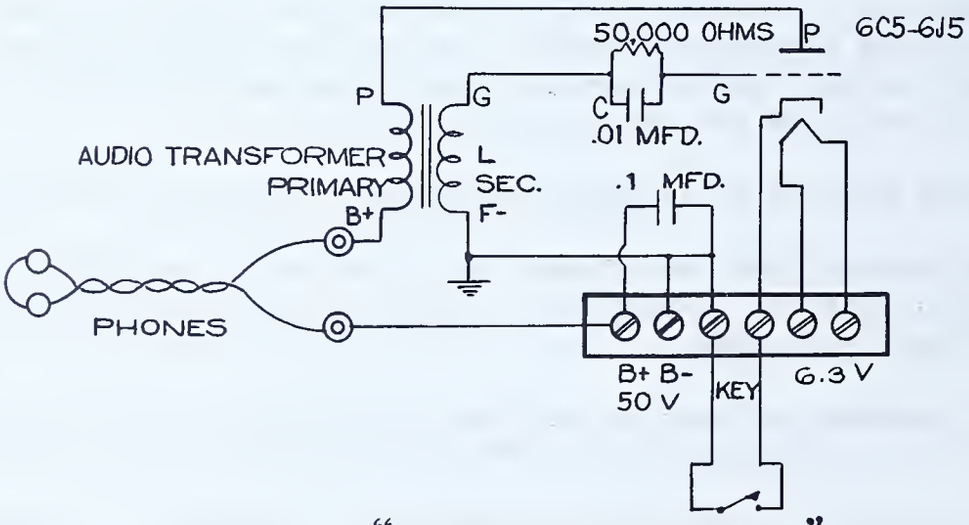

"AUDIO OSCILLATOR"
(SCHEMATIC DIAGRAM)

FIG. 2

Tools needed:

1. Soldering iron
2. Screw driver
3. Socket wrenches
4. Long nose pliers
5. Hand drill
6. Drills as required
7. Diagonal cutters

Equipment needed:

1. Power supply
2. Ohmmeter
3. Voltmeter, 0-500 v

Materials needed:

1. Solder, rosin core
2. Push-back wire
3. 1- Chassis 5" x $7\frac{1}{2}$" x 2" as prepared in Job 5
4. 1- Audio transformer
5. 1- Octal socket
6. 1- 50,000 ohm 1 watt resistor
7. 1- .01 mfd. 400 volt capacitor
8. 2- pin jacks
9. 1- 6C5 tube or 6J5
10. 1- set phones
11. 1- key, telegraph
12. 4- $\frac{1}{4}$" 6-32 R.H. brass screws with nuts and lock washers
13. 2- 0.1 mfd. 400 volt capacitor
14. 1- .001 mfd. 400 volt capacitor
15. 1- 6 connection terminal strip screw type
16. Tie points as required
17. Wire - for use in connecting to key and between power supply and oscillator

Procedure:

1. Obtain tools and materials from stock room. Obtain equipment from stock room as needed.

2. Test all parts for operating conditions.

3. Make wiring diagram from schematic diagram, Fig. 2, and chassis layout, Fig. 1. Show location of all parts and wires. Use tube manual to find tube connections.

4. Have instructor approve wiring diagram.

5. Determine mounting centers of transformer to be used.

6. Determine whether transformer can be mounted on bottom of chassis; this is determined by size and type of transformer.

7. Lay out chassis so that the transformer is mounted on bottom of chassis if possible. If not, mount transformer on top.

8. Drill chassis for mounting of audio transformer.

9. Drill any holes necessary to bring wires from transformer to under side of chassis if the transformer is mounted on top of chassis.

10. Mount terminal strip, octal socket, and transformer on chassis.

11. Check terminals of parts for shorts to the chassis.

12. Wire in resistor and capacitors.

13. Complete remaining wiring according to prepared wiring diagram of Step 3.

14. Solder all connections.

15. Make a resistance analysis according to tabulation form on Question Sheet. Tabulate results in notebook on copy of form.

16. Connect power supply, key, and phones to oscillator as required. See schematic diagram, Fig. 2.

17. Place tube in socket.

18. Connect power supply line cord to a-c line and turn unit on.

19. Check voltages as required in tabulation form. Tabulate results in notebook. Key switch must be closed during these tests.

20. Listen for note in phones.

    Note: If no note is heard, reverse connections to primary winding on transformer. Consult instructor if no note is heard after leads are reversed.

21. Install 0.1 mfd. capacitor in place of .01 mfd. capacitor in the grid circuit. Observe and record any change in tone.

    Note: Power supply must be turned off while this work is being done.

22. Replace 0.1 mfd. capacitor with .001 mfd. capacitor. Observe and record any change in tone.

23. Increase "B" voltage to 100 volts by changing tap to power supply. Observe and record any change in signal.

24. Operate key to make code characters (dots and dashes) and listen for these characters in phones.

    Note: This is the type instrument constructed for code practice.

25. Dismantle, clean, and turn in parts to stock room.

QUESTIONS

Place the answers to these questions in your notebook or on form as directed by instructor

1. What is the range of audible frequencies?
2. What effect does changing C (Capacity) have upon the signal?
3. Upon what principle does this oscillator operate?
4. What type of coupling is used to feed back the energy?
5. What other type of coupling may be used?
6. What is an oscillator?
7. Did any change in the signal occur when the voltage was increased on the oscillator?
8. What is the effect of iron in the transformer?
9. Why is this oscillator called an L-C oscillator?
10. Where does current flow when the key is closed?
11. What is the purpose of the resistor and capacitor in the grid circuit of the tube?
12. What is the purpose of the phones?

References:

Watson, Welsh and Eby, Understanding Radio, pp. 136-137.

The Radio Amateur's Handbook, (Any Edition), A. R. R. L., Chapter on Measurement

The Radio Handbook, (Any Edition), Editors and Engineers, Chapter on Test and Measuring Equipment.

TABULATION FORMS

RESISTANCE ANALYSIS - Step 15

Connections	Ohms
Grid to B- terminal Plate to phones terminal G of tube to G of transformer G of trans. to B- terminal	

VOLTAGE CHECK - Step 19

Test points	Volts
Grid to B- Plate to B- Plate to phones	

TONE CHECK - Steps 21 and 22

Grid Capacitor	Signal note or tone
.01 mfd. 0.1 mfd. .001 mfd.	

TONE CHECK - Step 23

"B" Supply Voltage	Change of signal
100.	

JOB 16

A HARTLEY OSCILLATOR

The Hartley oscillator is a common type of circuit employing a vacuum tube to generate radio frequency signals. For this reason its construction and testing provides valuable experience to the trainee.

A HARTLEY OSCILLATOR

General Information:

A Hartley oscillator provides a-c voltage in that portion of the radio frequency range from 10,000 cycles (10 kilocycles) to 300,000,000 cycles (300 megacycles).

The values of inductance and capacity used in the oscillator to be constructed in this job permit the unit to generate frequencies of about 3500 kilocycles depending upon the setting of the variable capacitor.

The vacuum tube oscillator circuit consists of (1) a source of power (power supply or batteries), (2) a vacuum tube, and (3) a frequency control circuit whose components are usually an inductance and a capacitance.

The frequency generated by most vacuum tube oscillators is determined by the portion of the circuit comprising the inductance and capacitance, called the tuned circuit. To "tune" the circuit means to adjust the constants (values) of this circuit to cause the oscillator to generate alternating current voltage of a definite frequency depending upon the settings which the operator makes. It is common practice to have the value of inductance fixed and to vary the value of the capacity.

The frequency of oscillation may be determined by means of this formula:

$$f = \frac{1}{2\pi\sqrt{LC}}$$

which is equal to

$$f \text{ (cycles per second)} = \frac{159{,}000{,}000}{L \text{ (microhenrys)} \times C \text{ (mmfd.)}}$$

where f is frequency in cycles per second
L is the inductance of the coil in microhenrys and
C is the capacity of the tuned circuit in micro-microfarads

While the tuned circuit is the chief factor determining the generated frequency, temperature changes, supply voltage variations and mechanical structure are other factors which will affect the frequency slightly.

The voltage output of the oscillator may be obtained by inductive coupling employing transformer action, or capacitive coupling through a capacitor. Inductive coupling may be obtained by placing a coil of a few turns near the oscillator coil. Capacitive coupling may be obtained by connecting one lead wire to the plate with a small capacitor in series with the lead, and the other lead wire to the cathode.

Specifications:

1. Construct a Hartley oscillator according to the schematic diagram (Fig. 2) and chassis layout (Fig. 1).

2. Check and adjust the Hartley oscillator using voltmeter, milliammeter, neon bulb, absorption frequency meter, and monitor receiver.

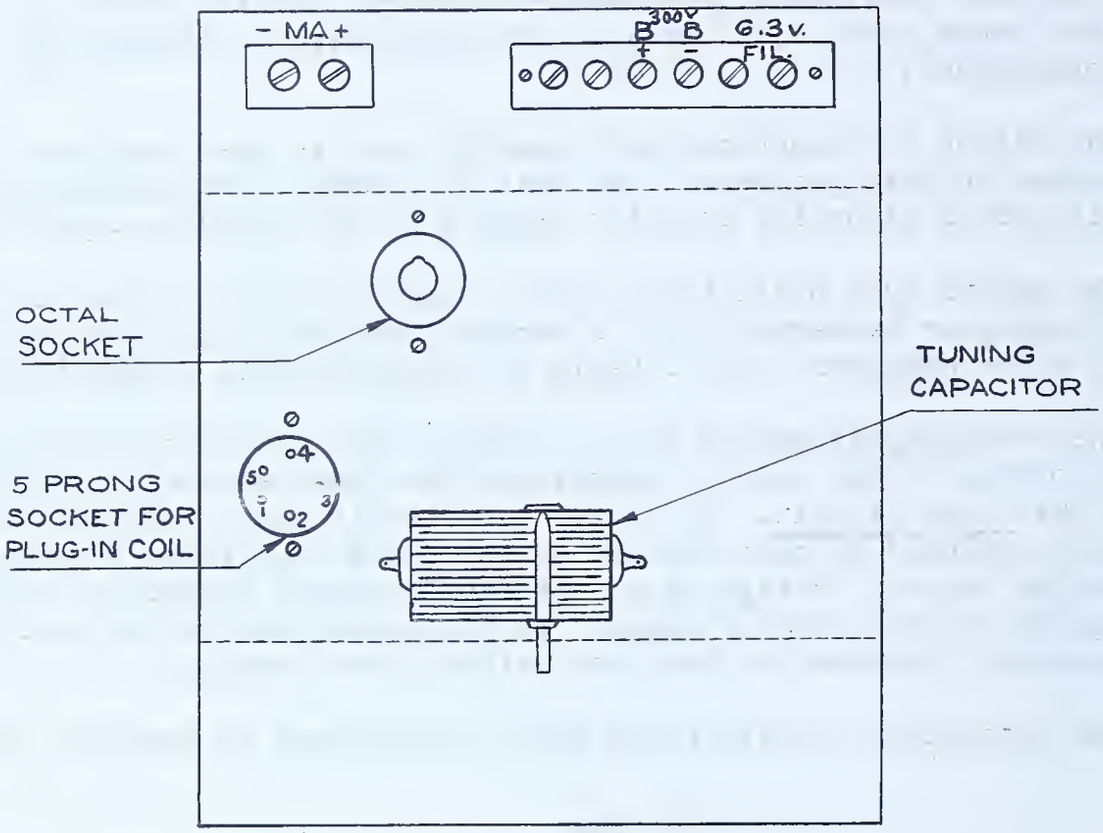

"CHASSIS LAYOUT"
(TOP VIEW)

FIG. 1

"HARTLEY OSCILLATOR"

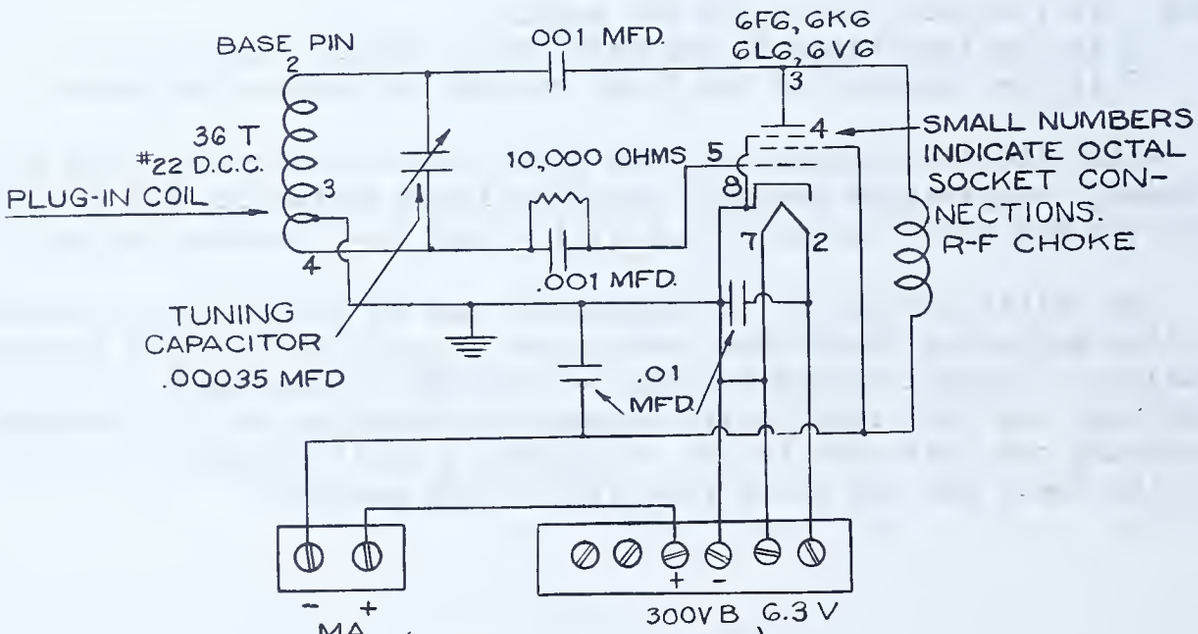

(SCHEMATIC DIAGRAM)

FIG. 2

Tools needed:

1. Soldering iron
2. Long nose pliers
3. Diagonal cutters
4. Screw drivers (set)
5. Socket wrenches (set)
6. Hand drill
7. Drills - 3/8", 1/8"
8. Dividers
9. Steel rule
10. Scriber

Equipment needed:

1. Absorption frequency meter with lamp indicator calibrated for 3500 kc range
2. Voltmeter 0-500 volts, d-c
3. Milliammeter 0-150 m.a., d-c
4. Power supply as constructed in Job 14
5. Ohmmeter
6. Monitor receiver

Materials needed:

1. 1- Metal chassis 5" x $7\frac{1}{2}$" x 2" as prepared in Job 5.
2. 1- Plug-in coil - wound in Job 13
3. 1- Socket, 5 prong
4. 1- Socket, octal
5. 1- Variable capacitor 350 mmf.
6. 2- .001 mfd. 1000 volt mica capacitors
7. 2- .01 mfd. 400 volt capacitor
8. 1- 10,000 ohm resistor, 2 watt carbon
9. 1- Choke, r-f, 2.5 mh.
10. 2- Fiber washers $\frac{1}{2}$" O.D., 3/16" hole
11. 2- Shoulder washers, $\frac{1}{2}$" O.D., $\frac{1}{4}$" I.D.
12. 1- 6 connection terminal strip, screw type
13. 1- 2 connection terminal strip, screw type
14. 8- $\frac{1}{4}$" 6-32 R.H. brass machine screws
15. 8- hex nuts for above screws
16. 8- lock washers
17. 1- flat type soldering lug
18. 1- 6F6, or 6K6, or 6V6, or 6L6 tube
19. Rosin core solder
20. Push-back wire
21. Neon lamp
22. Test leads
23. Dial for variable capacitor
24. Tie points as needed
25. Wire - for making connections between the power supply and oscillator

Procedure:

1. Obtain tools and materials from stock. Secure test equipment from stock room as needed.

2. Test parts for operating conditions.

3. Make wiring diagram using schematic and chassis layout. Show location of all parts and wiring.

4. Have instructor approve wiring diagram.

5. Determine mounting centers of tuning capacitor.

6. Lay out chassis for mounting tuning capacitor. See Fig. 1.

7. Drill chassis with 3/8" drill for mounting holes of tuning capacitor.

8. Drill 1/8" hole as indicated in specifications for lead wire to stator plates of tuning capacitor.

9. Mount sockets, 6 connection terminal strip, and tuning capacitor on chassis according to specifications. Tuning capacitor must be insulated from chassis by using fiber washers. A soldering lug is used under mounting screw as shown in Fig. 3.

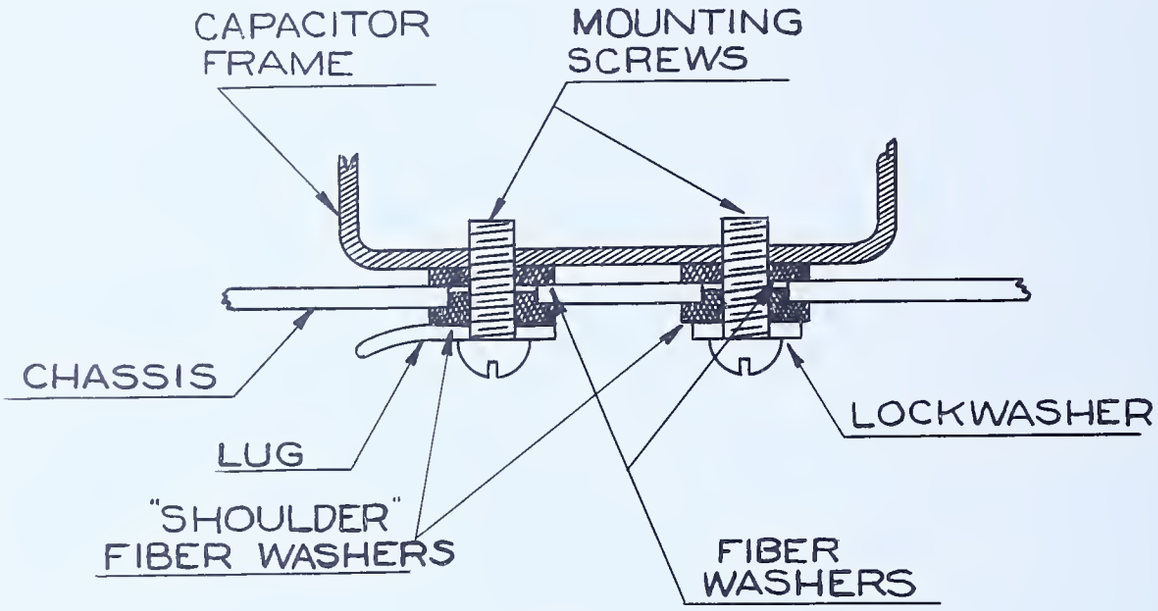

FIG.-3

10. Test between frame of tuning capacitor and chassis for short. Use ohmmeter. If short is present, adjust mounting of tuning capacitor so the short is cleared.

11. Wire unit according to wiring diagram.

12. Solder all connections.

13. Have work approved by instructor.

14. Insert plug-in coil and tube into their proper sockets.

15. Make resistance analysis according to tabulation form on the Question Sheet. Copy form and record results in notebook.

16. Connect power supply to unit so that necessary voltages are available.

17. Connect 0-150 m.a. milliammeter to proper terminals of terminal strip.

18. Put dial or knob on the tuning capacitor shaft.

19. Set tuning capacitor so that its plates are about one quarter meshed.

20. Connect power supply to a-c line and turn unit on.

21. Perform the following test procedure and record readings and calculations in notebook on copy of form on Question Sheet:

    a. Measure and record value of plate voltage existing between plate supply terminal and chassis. Read milliammeter.
    b. Calculate the power input in watts. P = E x I
    c. Bring neon lamp near the plate end (top) of the plug-in coil and observe reaction. Try other points along the coil.
    d. Obtain from stock room an absorption frequency meter with lamp indicator.
    e. Hold the pick-up coil of the frequency meter near the plug-in coil of the oscillator. Turn the capacitor dial of the frequency meter until the lamp glows brightest.

       Caution: Do not hold the pick-up coil too close or the lamp will burn out.

    f. Observe the action of the milliammeter in the plate circuit as the frequency meter dial is varied.
    g. Record maximum values of plate current indicated for the following approximate distances of the frequency meter coil from the oscillator coil: 1", 2", 3", 4", 5", 6".
    h. Fix the frequency meter at such a distance as to give a fair brilliancy, not so close that the bulb is burned out.
    i. Vary the B+ voltage applied to the oscillator to the following values by shifting the B+ lead to the taps on the power supply: 250 volts, 100 volts, 50 volts.

       Note: Turn off power supply while changing tap.

       Read milliammeter at each step and record readings in notebook on copy of form on Question Sheet. Note changes in brilliancy of lamp at each voltage.

    j. Listen for the signal generated by the oscillator on any available receiver covering the 3500 kc range. The receiver must be set for that range and its dial adjusted from its maximum to minimum setting with the volume control advanced. If the receiver is of the regenerative detector type, the detector should be made to oscillate and the Hartley oscillator signal will be found when a loud whistle is heard from the receiver.

       If the receiver is a superheterodyne with a beat frequency oscillator, the beat frequency oscillator must be turned on to find the whistle indicating the signal. If the superheterodyne has no beat frequency oscillator, the signal will be found at the point the background noise in the receiver disappears.

22. Disconnect apparatus.

23. Disassemble oscillator unit.

24. Return parts to stock room.

QUESTIONS

Place the answers to these questions in your notebook or on form as directed by instructor.

1. What is the radio frequency range?
2. What three things are necessary for the vacuum tube oscillator circuit?
3. What determines the frequency of the generated alternating current?
4. What is meant by "tuning" a circuit?
5. What unit is generally varied when we tune a circuit?
6. What is the relationship between frequency, inductance, and capacity of a tuned circuit?
7. What factors other than the inductance and capacitance may vary the frequency slightly?
8. Name two ways by which we may secure the voltage output from the oscillator?
9. At which position along the oscillator coil did the neon bulb light brightest?
10. Did the lamp on the frequency meter light brightest when the pick-up coil was nearest or farthest from the oscillator coil?
11. What was the effect on the plate current of the closeness of coupling between the pick-up coil and oscillator coil?
12. What was the effect on the plate current of tuning the frequency meter to make the lamp glow?
13. How did changing the plate voltage affect the lamp brilliancy?
14. Why was the tuning capacitor insulated from the chassis?
15. Was the positive or negative post of the milliammeter connected to the B+ voltage from the power supply?
16. How did the receiver used indicate the presence of the oscillator signal?

References:

Ghirardi, A. A., Radio Physics Course (Second Edition), p. 239.

Timbie, W. H., Elements of Electricity (Third Edition), p. 490.

Watson, Welsh and Eby, Understanding Radio, pp. 136-137, 416-430.

The Radio Handbook (Any Edition), Editors and Engineers, Chapter on Test and Measuring Equipment.

TABULATION FORMS

RESISTANCE ANALYSIS - Step 15

Points measured	Resistance - Ohms
Plate to minus meter terminal	
Grid to cathode	
Tuning capacitor rotor plates to cathode	
Tuning capacitor stator plates to cathode	

TEST PROCEDURE - Step 21

a. Ep =

Ip =

b. P = Ep x Ip =

g.

Distance	Ip
1"	
2"	
3"	
4"	
5"	
6"	

i.

Voltage	Ip
300v	
250v	
100v	
50v	

JOB 17

A SINGLE STAGE AUDIO AMPLIFIER

The audio amplifier is used in most radio receivers and transmitters to increase the strength of audio frequency signals. The single stage amplifier is one employing a single tube for this purpose.

A SINGLE STAGE AUDIO AMPLIFIER

General Information:

The audio frequency amplifier increases the strength of electrical impulses in radios, public address systems, or phonographs for the purpose of increasing volume. It steps up or amplifies the electrical impulses within the audible range of frequencies, (20 to 20,000 cycles per second) known as the audio frequency range.

Devices such as microphones, phonograph pickups, audio oscillators, and the detector stage of a radio generate audio frequency impulses or currents which are connected to the input of the audio amplifier.

The PM (permanent magnet) speaker, connected to the output of the amplifier, converts the amplified electrical impulses to sound waves which can be heard.

The amplifying property of the vacuum tube is utilized in the audio amplifier. When a signal is applied between the control grid (grid nearest the cathode) and the cathode of the tube (input), a much larger signal is developed between the plate and the cathode (output). For greater amplification several amplifiers are connected together.

The explanation of the circuit is as follows: the unit which provides the audio impulses is connected to the input terminals of the amplifier and the signals from that unit are thus impressed on the potentiometer (volume control). See Fig. 2, schematic diagram.

The control grid of the tube is connected to the rotating arm of the potentiometer (indicated by the arrow in diagram) so that any amount of the signal may be applied to the grid. Maximum volume is of course obtained when full input is applied to the grid.

The 500 ohm resistor connected between cathode and chassis is called a bias resistor because the voltage drop across this resistor is used for grid bias on the tube. Bias is a term used for voltage supplied to the grid of a tube.

The 20 mfd. capacitor shunting the bias resistor is called a by-pass capacitor because it passes audio frequency currents around the bias resistor. Thus a signal between the grid and chassis will act between the grid and cathode as the by-pass capacitor will show slight opposition to the a-f signal.

The .01 mfd. capacitor and 25,000 ohm variable resistor connected between the plate of the tube and B+ serve as a tone control. When the rotating arm of the resistor is set so the .01 mfd. capacitor is connected directly from plate to B+, the higher audio frequencies are by-passed through this capacitor. This gives the effect of a deeper tone since the higher frequencies have been removed. When the variable resistor is set so that full resistance is in the circuit, the by-passing effect is reduced, permitting the higher frequencies to go on to the output transformer.

The plate of the amplifier tube is connected to the output transformer which induces the amplified signal from the plate through the transformer to the speaker.

Specifications:

1. Construct a single stage audio amplifier according to schematic and chassis layout.

2. Make the following tests and record results on a copy of form shown on Question Sheet:

    a. Point to point resistance analysis
    b. Voltage analysis

3. Operate the amplifier using the following:

    a. Phonograph
    b. Audio oscillator

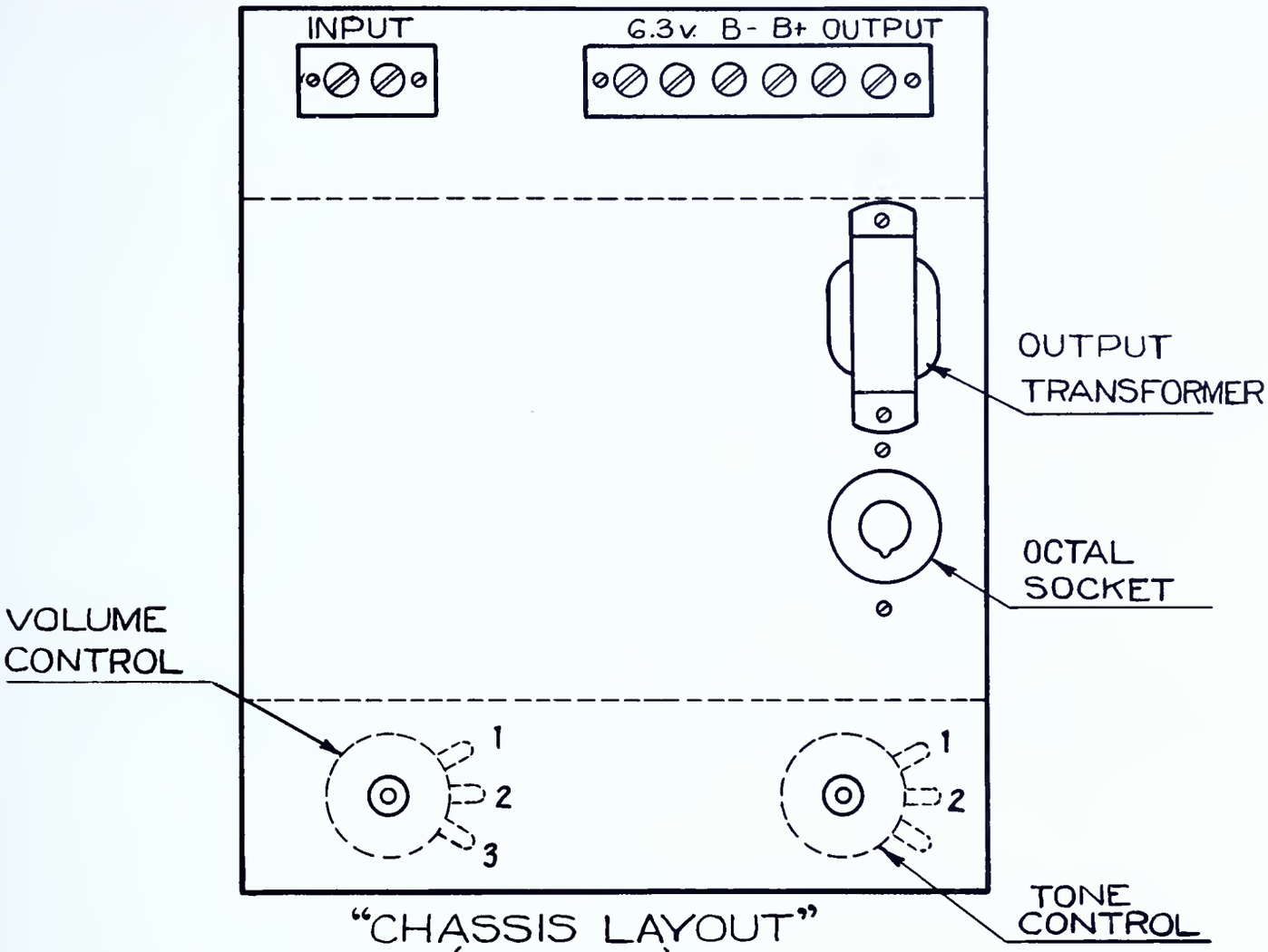

"CHASSIS LAYOUT"
(TOP VIEW)

FIG.-1

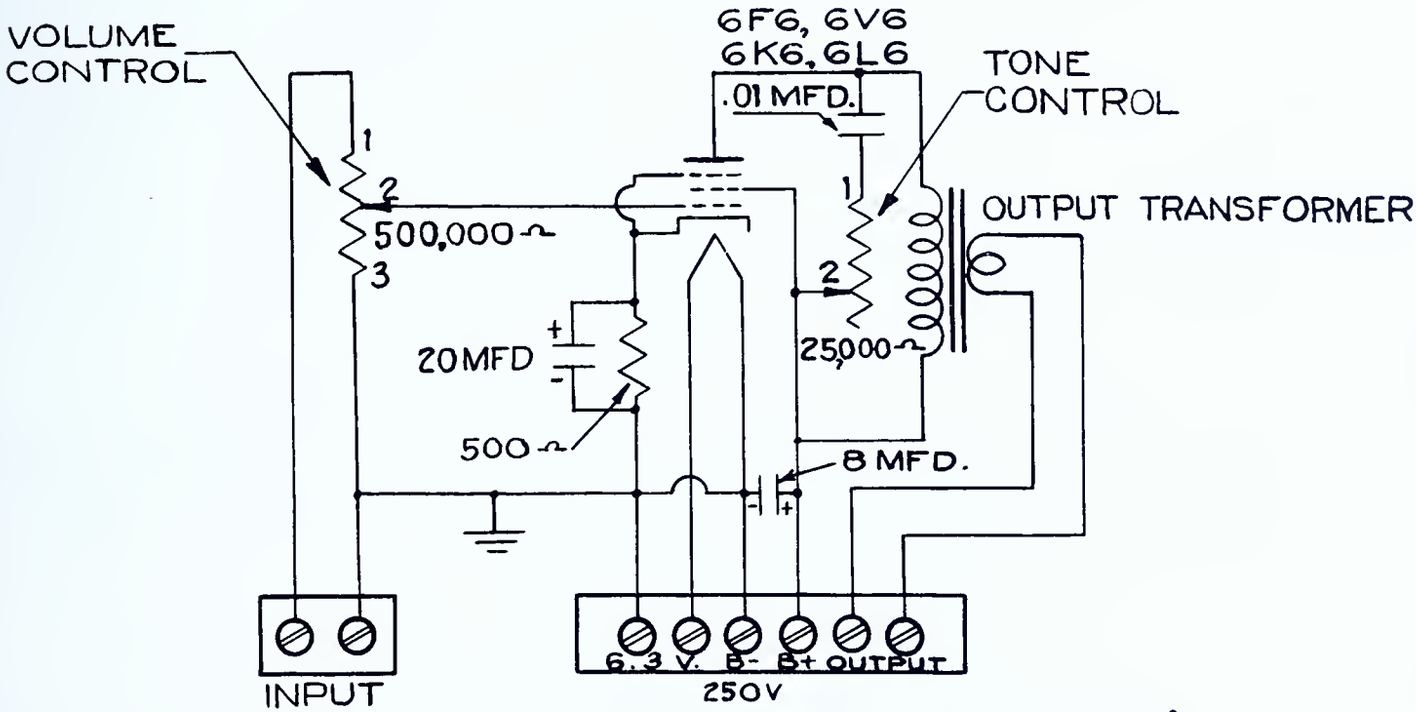

"SINGLE STAGE AUDIO AMPLIFIER"
(SCHEMATIC DIAGRAM)

FIG.-2

Tools needed:

1. Soldering iron
2. Diagonal Cutters
3. Long nose pliers
4. Hand drill
5. Screw driver
6. Socket wrenches
7. Drills as needed
8. Scriber
9. Steel rule

Equipment needed:

1. Ohmmeter
2. Voltmeter, 0-25, 0-500v, d-c
3. 1- 12" PM speaker
   6- 8 ohm voice coil
4. 1- Power supply
5. 1- Phonograph player
6. 1- Audio oscillator
7. 1- Set headphones

Materials needed:

1. Rosin core solder
2. Push-back wire
3. 8- $\frac{1}{4}$" 6-32 R.H. brass machine screws
4. 8- hex nuts for 6-32 screws
5. 8- lock washers for 6-32 screws
6. 1- chassis 5" x $7\frac{1}{2}$" x 2" made in Job 5
7. 1- Output transformer to match single pentode to 6-8 ohm voice coil
8. 1- 8 mfd. capacitor, 450 volt
9. 1- .01 mfd. capacitor, 400 volt
10. 1- 20 mfd. capacitor, 25 volt
11. 1- 500,000 ohm potentiometer
12. 1- 25,000 ohm potentiometer
13. 1- 500 ohm 1 watt resistor
14. 1- octal socket
15. 1- 2 connection terminal strip
16. 1- 6 connection terminal strip
17. 2- knobs for controls
18. 1- 6F6, 6K6, 6V6, or 6L6 tube
19. 1- Roll tape (Friction or "Scotch")
20. Tie points as required
21. Wire - for making connections between amplifier and power supply
22. Test block consisting of:
    a. 4- Fahnestock clips
    b. 4- Roundhead blued woodscrews, $\frac{1}{2}$" #6.
    c. 1- Block of wood, 3" x $4\frac{1}{4}$" x $\frac{1}{2}$" or thicker
    d. 1- 0.1 mfd. capacitor, 400v

Procedure:

A. Construction:

1. Secure tools and materials from stock room. Obtain equipment from stock room as needed.

2. Test all parts for operating condition.

3. Make wiring diagram using schematic and chassis layout. Refer to socket connections in tube manual for tube used. Be sure connections to volume and tone controls coincide as indicated by numbers on chassis layout and schematic diagram.

4. Present wiring diagram to instructor for inspection.

5. Determine mounting centers of output transformer.

6. Layout and drill chassis to mount output transformer as indicated in specifications.

7. Drill holes necessary to bring leads from output transformer through chassis.

8. Mount terminal strips, potentiometers, socket and output transformer on chassis.

9. Check all terminals for shorts to chassis.

10. Wire according to prepared wiring diagram. Be sure positive terminal of electrolytic capacitor is connected to the cathode of the tube.

11. Solder all connections.

12. Present work to instructor for approval.

13. Make a resistance analysis according to chart on Question Sheet. Tabulate results in notebook.

14. Insert tube in amplifier.

15. Connect power supply to amplifier terminal strip to furnish correct voltages as indicated by specifications.

16. Plug in power supply to 105-125 volt a-c outlet and turn unit on.

17. Make a voltage analysis according to form on Question Sheet. Tabulate results in notebook on copy of form.

B. Operation:

1. Connect PM speaker to output terminals of amplifier.

2. Connect phonograph to input terminals. Consult instructor for connections. Be sure black or shielded lead from phonograph connects to chassis terminal of input.

3. Operate phonograph. Adjust volume control. Notice how smoothly volume is controlled.

4. Adjust tone control to different positions; notice effect on music.

5. Disconnect phonograph from input terminal.

6. Advance volume control to maximum position.

7. Hold end of finger on input terminals, one at a time. Notice on which terminal a slight singing noise is heard in the speaker. This terminal is called the "hot" terminal. This test is sometimes applied to an amplifier to determine whether the unit is working.

8. Secure audio oscillator and connect it to input of amplifier. Consult instructor for this operation as well as for the operation of the audio oscillator.

9. Set audio oscillator for 5000 cycle note. Turn up output control of audio oscillator for a signal of good volume in the speaker.

10. Vary the tone control. Notice effect upon signal.

11. Set oscillator for 200 cycle note.

12. Vary the tone control. Notice effect upon signal.

13. Construct or secure test block prepared as in Fig. 3. This has a 0.1 mfd., 400 volt capacitor mounted between two Fahnestock clips, and a wire, (any size) between two other clips.

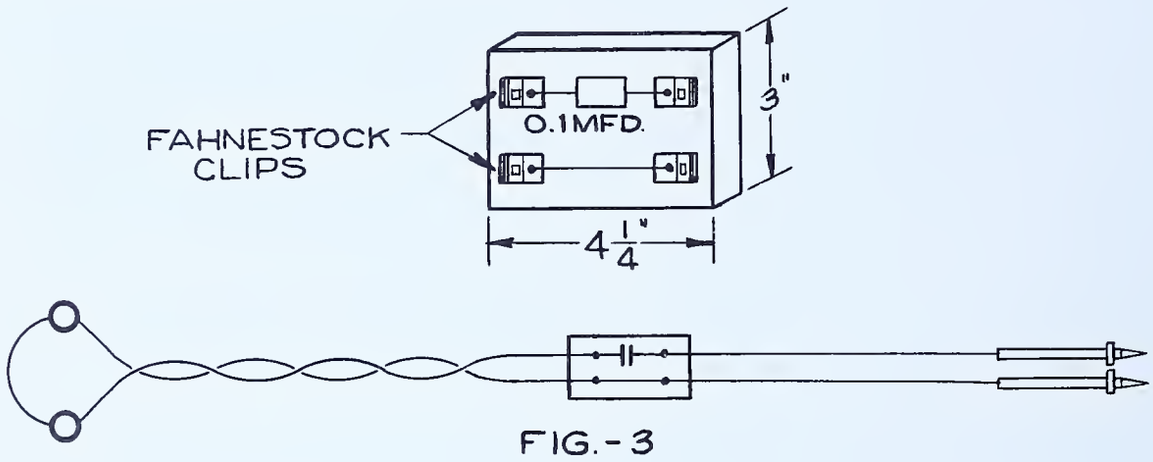

FIG.-3

14. Connect head phones to a pair of test leads, through this block. See Fig. 3.

15. Put phones on head. Hold test prods to the input terminals of amplifier. Note volume in phones.

16. Connect test prods between plate of amplifier tube and chassis. (One prod to plate and one to chassis.) Note volume in phones now. Increase in volume represents amplification in the tube.

    Caution: Do not permit test prods to short to any other terminal during this test.

17. Disconnect leads to the test block and return block to store room.

18. Disconnect equipment. Keep amplifier for next job.

19. Return equipment and tools to stock room.

QUESTIONS

Place the answers to these questions in your notebook or on form as directed by instructor.

1. What is the purpose of the audio amplifier?
2. What is the purpose of the phonograph pickup?
3. Where is the phonograph pickup connected to the amplifier?
4. What is the purpose of the PM speaker?
5. Where is it connected to the amplifier?
6. What is the property of the vacuum tube utilized by the audio amplifier?
7. Where is the signal applied to the vacuum tube?
8. Where is the amplified signal taken from the vacuum tube?
9. To which part of the potentiometer is the control grid of the tube connected?
10. What is the purpose of the potentiometer to which the grid is connected?
11. What is the purpose of the 500 ohm resistor connected between cathode and chassis?
12. What is the purpose of the 20 mfd. capacitor connected across the 500 ohm resistor?
13. What does the .01 mfd. capacitor do when the 25,000 ohm variable resistor is set for zero resistance?
14. How does the signal get from the tube to the speaker?

References:

Ghirardi, A. A., Radio Physics Course (Second Edition), pp. 615-684, 792-809.

Timbie, W. H., Elements of Electricity (Third Edition), p. 483.

Watson, Welsh and Eby, Understanding Radio, pp. 238-245, 338-350.

The Radio Amateur's Handbook (Any Edition), A.R.R.L., Chapter on Speech Amplifiers.

The Radio Handbook (Any Edition), Editors and Engineers, Chapter on Speech and Modulation Equipment.

TABULATION FORMS

RESISTANCE ANALYSIS - Step 13 of Procedure A

Points measured	Ohms
Grid to chassis	
Cathode to chassis	
Plate to B+	
Across input terminals	
Across output terminals	

VOLTAGE ANALYSIS - Step 17 of Procedure A

Points measured	Volts
Control grid to chassis	
Cathode to chassis	
Plate to chassis	
Plate to cathode	
B+ to chassis	

JOB 18

A RESISTANCE COUPLED AMPLIFIER

When greater amplification than can be obtained from a single stage is required, two or more stages employing two or more tubes may be used. Various methods of coupling one tube to another are employed. The resistance coupled amplifier is one of the most satisfactory types of amplifiers designed to secure a large amount of amplification.

RESISTANCE COUPLED AMPLIFIER

General Information:

The resistance coupled amplifier is so named because resistors are used in the grid and plate circuits of the amplifier tubes. In addition a capacitor is used to couple the plate of one tube to the grid of the next. See Fig. 1.

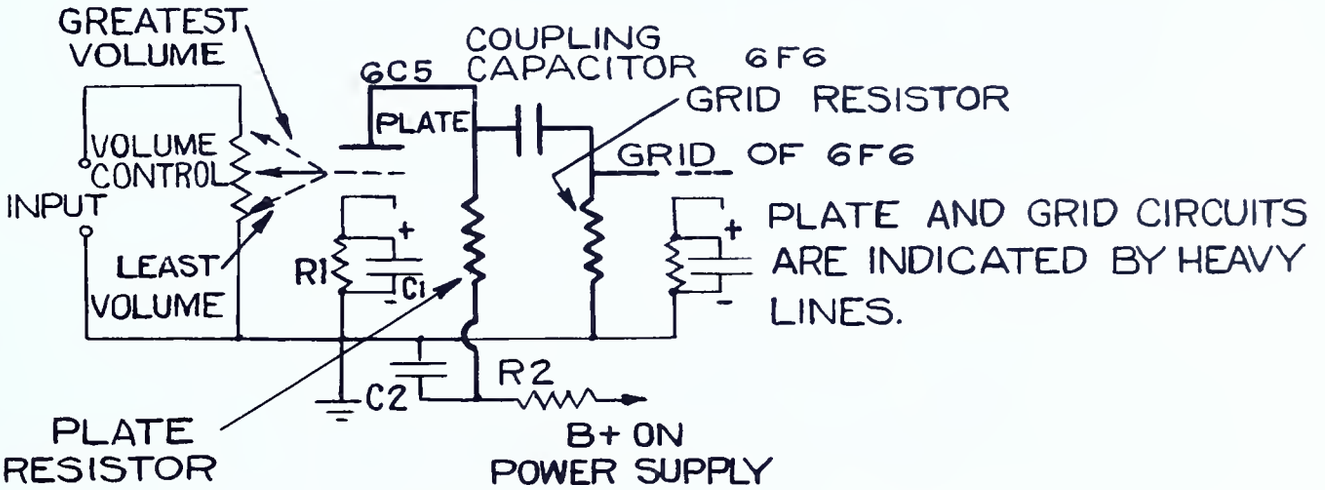

FIG.-1

The function of the circuit components is as follows: The audio frequency impulses are fed into the input terminals of the amplifier and thus to the volume control. The rotating arm of the control is connected to the grid of the 6C5 tube so that any amount of the input signal between zero and full strength may be fed into this tube as the position of the arm is changed.

The voltage drop across R_1 is used as grid bias for the tube but since R_1 is connected between cathode and chassis, it is known as the cathode bias resistor.

Since the cathode bias resistor would tend to oppose audio frequency currents flowing in the grid-cathode circuit, C_1 is employed as a bypass capacitor permitting these audio frequency currents to flow.

Due to the amplifying properties of the tube, a much greater signal is developed in the plate circuit than was introduced in the grid circuit and this amplified signal is produced across the plate resistor of the 6C5 tube.

The resistor R_2 and capacitor C_2 connected to the plate resistor serve a dual purpose: first, they tend to reduce any possible hum that may be induced from the power supply; secondly, they form a filter circuit which prevents signals from returning to the power unit; these signals in turn could be injected in another tube circuit causing unstable operation.

To further amplify the signal, it is fed into the grid of the 6F6 tube and amplified by that tube. Since the plate of the 6C5 tube is positive and

the grid of the 6F6 must not be positive (or the tube will be damaged), a capacitor is used between the plate of the 6C5 and the grid of the 6F6. This capacitor permits the a-c audio signal from the plate circuit to be transferred to the grid circuit; but since direct current will not go through the capacitor, the grid is not made positive. This capacitor is called a "coupling capacitor" because it couples the plate of one tube to the grid of another. It is also called a "blocking" or "stopping" capacitor because it blocks or stops the positive voltage from the plate of the 6C5 from reaching the grid of the 6F6.

The resistor connected between the grid of the 6F6 and chassis is called a grid resistor or grid leak because it provides a path for electrons to flow or leak from grid to chassis.

The 6F6 tube operates in the same fashion as in the previous job.

In common practice the 6C5 tube would be called a voltage amplifier because its main function is to step up or increase the voltage of the audio frequency signal. The 6F6 tube is called a power amplifier because its principal function is to supply a considerable amount of power to the speaker. Its secondary function is one of voltage amplification.

Specifications:

1. Construct a stage of audio amplification preceding the single stage built in previous job.

2. Perform the following tests:

    a. Point to point resistance analysis
    b. Voltage analysis
    c. Operation using phonograph input
    d. Operation using audio oscillator

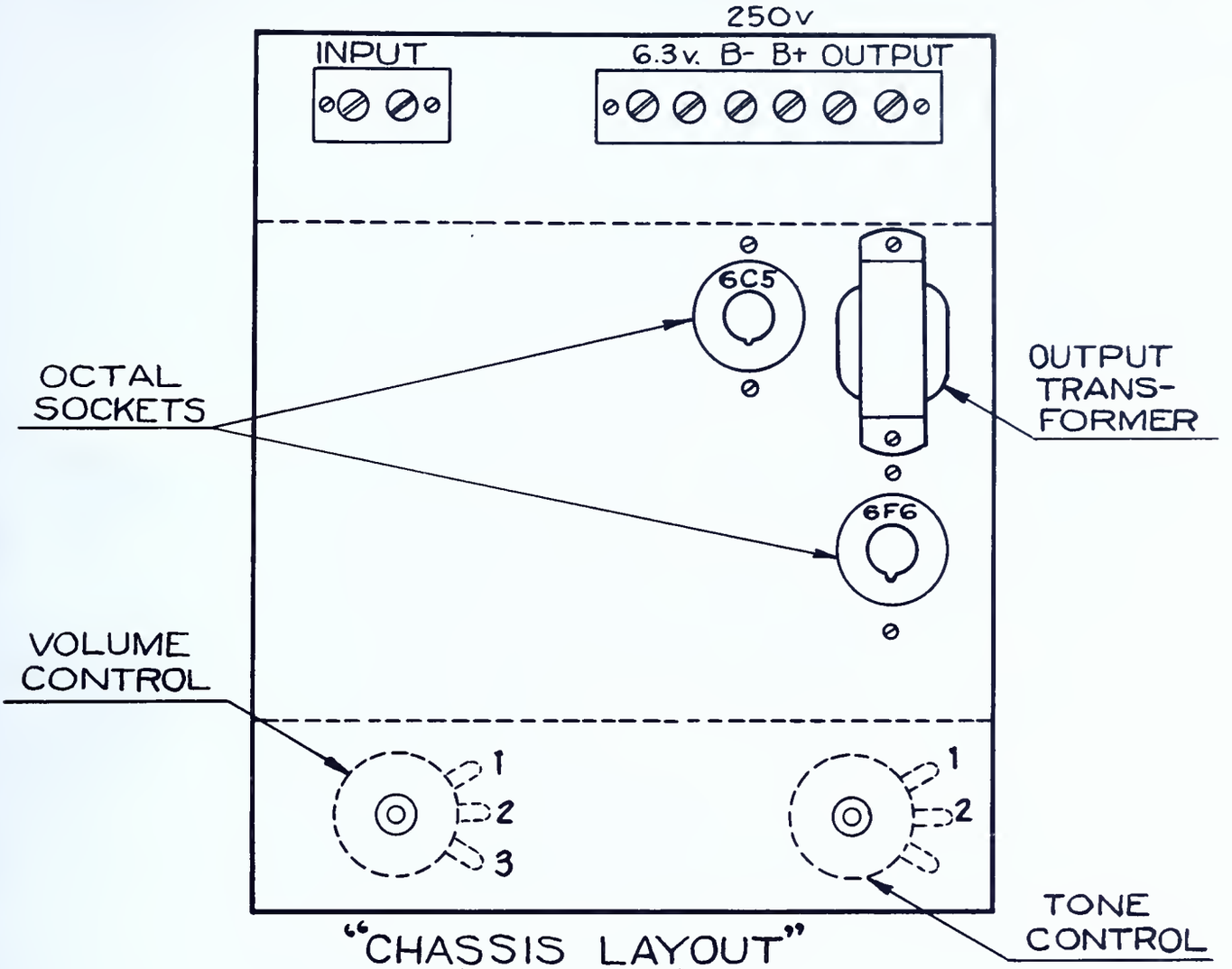

"CHASSIS LAYOUT"
(TOP VIEW)
FIG.-2

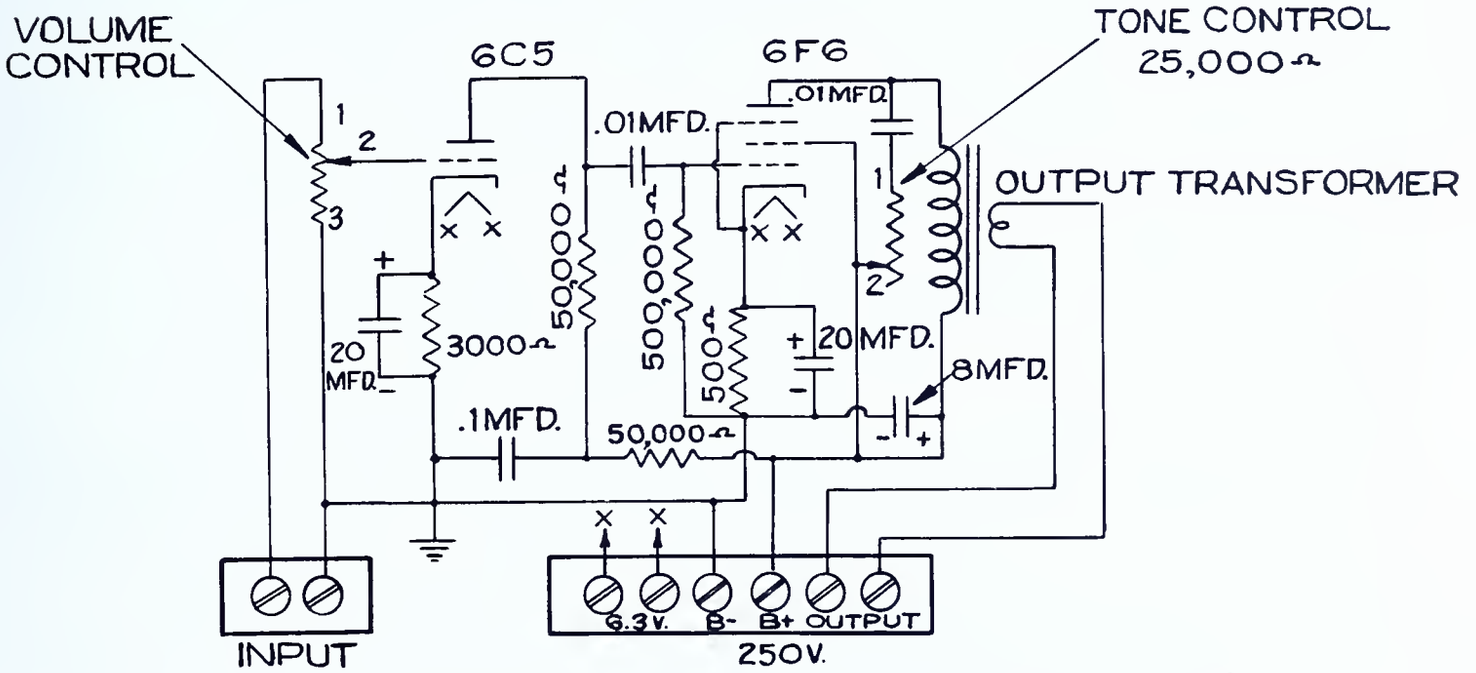

"RESISTANCE COUPLED AMPLIFIER"
(SCHEMATIC DIAGRAM)
FIG.-3

Tools needed:

1. Soldering iron
2. Screw driver
3. Socket wrenches
4. Long nose pliers
5. Diagonal Cutters

Equipment needed:

1. Power supply
2. Phonograph unit
3. Audio oscillator
4. Ohmmeter
5. Voltmeter, 0-100-500 volts, d-c
6. Headphones
7. 1- 12" PM speaker

Materials needed:

1. Single stage amplifier as constructed in Job 17
2. 1- 500,000 ohm resistor
3. 2- 50,000 ohm resistors
4. 1- 3,000 ohm resistors
5. 1- 20 mfd. capacitor, 25 volts
6. 2- 0.1 mfd. capacitor, 400 volts
7. 1- .01 mfd. capacitor, 400 volts
8. 1- 6C5 or 6J5 tube
9. Push-back wire
10. 1- octal socket
11. 1- 10 ohm 5 watt resistor
12. 2- $\frac{1}{4}$" 6-32 R.H. machine screws
13. 2- 6-32 hex nuts
14. 2- 6-32 lock washers
15. Test leads
16. Test block as used in Step 13 of Job 17
17. Wire - for making connections between amplifier and power supply
18. 1- 8 mfd. capacitor, 450 volts

Procedure:

1. Obtain materials and tools from stock room. Obtain equipment when necessary.

2. Test parts for operating conditions.

3. Make wiring diagram using the schematic and chassis layout. Filaments are wired in parallel and to points xx on terminal strip. Filament wires should be twisted. Be sure connections to volume and tone controls coincide as indicated by numbers on chassis layout and schematic diagram.

4. Present wiring diagram to instructor for approval.

5. Mount socket for 6C5 tube as indicated in chassis layout.

6. Wire unit according to wiring diagram.

7. Solder all connections.

8. Present work to instructor for approval.

9. Make a resistance analysis according to form on Question Sheet. Tabulate results in notebook on copy of form.

10. Insert tubes in amplifier; be sure tubes are in correct sockets.

11. Connect power supply to amplifier terminal strip to furnish correct voltages as designated.

12. Plug in power supply to 105-125 volt a-c outlet and turn unit on.

13. Make a voltage analysis according to form on Question Sheet. Tabulate results in notebook on copy of form.

14. Connect a PM speaker to output terminals of amplifier.

15. Connect a phonograph to input terminals.

16. Operate phonograph. Notice how much greater volume can be obtained from this amplifier than from the single stage amplifier built in Job 17.

17. Adjust tone control to different positions. Notice effect on music.

18. Connect test leads to headphones with 0.1 mfd. capacitor in the circuit using test block as in Step 13 of Job 17.

19. Connect a 10 ohm resistor to output terminals in place of PM speaker to provide a load for the unit when the speaker is not connected.

    Note: Power supply must be turned off while this is done.

20. Operate amplifier and phonograph.

21. Hold headphone test prods to amplifier input terminals. Note volume in phones.

22. Vary volume control. Notice if volume in phones is changed.

23. Connect test prods between the grid of the 6C5 tube and chassis.

24. Vary volume control. Notice if volume in phones is changed.

25. Connect test prods between plate of the 6C5 tube and chassis. Note increase in volume.

26. Connect test prods between control grid 6F6 tube and chassis. Notice if volume changes.

27. Vary tone control. Notice if tone changes.

28. Connect test prods between plate of 6F6 tube and chassis. Notice if volume increases.

29. Vary tone control. Notice if tone changes.

30. Vary volume control. Notice smoothness of controlling volume.

31. Disconnect phonograph from input terminals.

32. Advance volume control to maximum position.

33. Hold end of finger to "hot" input terminal. Notice result.

34. Disconnect the test leads from phones.

35. Connect test leads to output of audio oscillator.

36. Plug in line cord of audio oscillator to 105-125 volt a-c outlet and turn unit on.

37. Remove 10 ohm resistor from output of amplifier and connect speaker.

38. Connect test lead from black or "O" output terminal of audio oscillator to chassis of amplifier.

39. Connect other test lead from audio oscillator to "hot" input terminal of oscillator.

40. Set audio oscillator to 400 cycles and the output control for a loud signal in speaker.

41. Remove test lead from "hot" input terminal and hold a prod of that lead to control grid of 6F6 tube. Notice decrease in volume which represents elimination of amplification of the 6C5 tube.

42. Disassemble equipment.

43. Remove all parts from amplifier. Clean parts and return to stock room.

QUESTIONS

Place the answers to these questions in your notebook or on form as directed by instructor.

1. Why is a resistance coupled amplifier so named?

2. How is coupling actually achieved between plate and grid of the tubes in a resistance coupled amplifier?

3. What is the purpose of the resistor connected between cathode of the 6C5 tube and chassis?

4. What is the purpose of the capacitor shunting that resistor?

5. To which tube is the volume control connected? To which element of that tube?

6. What would be the result if the plate of the 6C5 were directly connected to the grid of the 6F6?

7. Why is the same capacitor sometimes called a coupling capacitor and a blocking capacitor?

8. Where is the audio signal in the plate circuit of the 6C5 tube produced?

9. What is the purpose of the resistor connected between the grid of the 6F6 and chassis?

10. What is the function of the resistor and capacitor connected to the 6C5 plate resistor?

11. What is the term usually applied to the 6C5 amplifier stage?

12. Why was the amplification greater using this unit than when the previous unit was used?

References:

Watson, Welsh and Eby, Understanding Radio, pp. 246-249.

The Radio Amateur's Handbook (Any Edition), A. R. R. L., Chapter on Speech Amplifiers.

The Radio Handbook (Any Edition), Editors and Engineers, Chapter on Speech and Modulation Equipment.

TABULATION FORMS

RESISTANCE ANALYSIS - Step 9

Points measured	Ohms
Grid of 6C5 to chassis	
Plate of 6C5 to B+ terminal	
Cathode of 6C5 to chassis	
Grid of 6F6 to chassis	
Grid of 6F6 to plate of 6C5	
Cathode of 6F6 to plate of 6C5	
Plate of 6F6 to B+	

VOLTAGE ANALYSIS - Step 13

Points measured	Volts
Plate of 6C5 to chassis	
Cathode of 6C5 to chassis	
Grid of 6C5 to chassis	
Plate of 6F6 to chassis	
Cathode of 6F6 to chassis	
Grid of 6F6 to chassis	
B+ terminal to chassis	

JOB 19

A FREQUENCY METER

Frequency meters are used for measuring the rate of oscillation present in an alternating current circuit. The absorption frequency meter may be used for the measurement of frequencies which are within that portion of the radio spectrum, from 10 kilocycles to 100 megacycles.

A FREQUENCY METER

General Information:

The principle of operation of the absorption type frequency meter is based on the fact that when two circuits are adjusted to the same frequency and brought near each other, there will be a transfer of energy from one circuit to another. This is called coupling, and depends upon such factors as distance between the coils, the angle between their axes, and the design of the coil itself.

By coupling the frequency meter coil to the radio frequency source whose frequency is to be found, any one of the following reactions show when the frequency meter is set to the same frequency as that of the r-f source:

(1) A change of the power output from the r-f source,
(2) A voltage across the terminals of the frequency meter,
(3) A flow of current in the frequency meter.

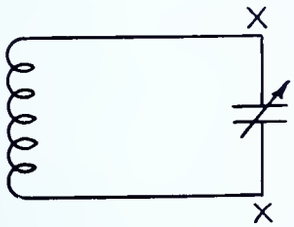

FIG.- 1

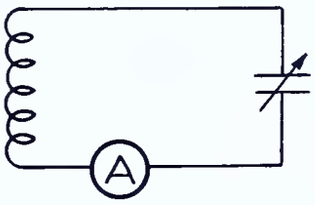

FIG. -2

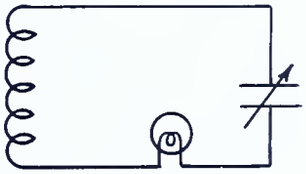

FIG.-3

When the frequency meter coil and capacitor of Fig. 1 are adjusted to the same frequency as the r-f source, a comparatively high current will circulate between the coil and the capacitor. There will also be a voltage built up across the points X-X. This condition is known as resonance.

Resonance may be indicated by any device which responds either to the circulating current or to the voltage.

Fig. 2 shows an r-f ammeter as resonance indicator. Fig. 3 shows a pilot lamp or flashlight bulb used for the same purpose. These devices (Figs. 2 and 3) are simple but draw considerable energy in operation. Because of this loss the resonance point is not as sharply defined as may be desired.

The voltage developed across points X-X in the frequency meter circuit of Fig. 1 can be measured by means of a vacuum tube voltmeter. This is desirable since this type of voltmeter is quite sensitive to small changes in r-f voltage and draws very little energy from the circuit. The very slight r-f loss permits very sharp definition of the resonance point.

The coupling between frequency meter and signal source is usually adjusted to a minimum that will give a satisfactory indication in the meter. This makes a more accurate determination of frequency possible.

Frequency meters should be carefully constructed using rigid wiring and mounting. The dial should be provided with an accurate scale which may be easily read.

Calibration

Frequency meters manufactured commercially are equipped with dials whose scales are calibrated directly in frequencies (k.c or m.c.).

The frequency meter built in this unit uses a dial calibrated in numbers 0 to 100. In order to make the frequency meter useful the dial must be calibrated by checking points on the dial against some standard of frequency such as a good commercial signal generator. For each dial point used, the corresponding frequency of the signal generator is recorded. A graph is then made using dial settings along the horizontal base of the graph and corresponding frequencies along the vertical reference line. See Reference KK on graphs, Page 297.

Frequency Checking

Once the frequency meter is calibrated it is useful for measuring the unknown frequency of any alternating current voltage within the range of the frequency meter. This is done by coupling the frequency meter to the unknown source, adjusting for greatest indicator change, then reading the value of frequency as indicated by the dial setting and prepared graph.

Specifications:

1. Construct a frequency meter according to schematic diagram (Fig. 6) and chassis layout (Fig. 5).

2. Coil to be wound on 3" long, $1\frac{1}{2}$" diameter, 5 prong coil form with primary of 10 turns of #22 B & S D.C.C. copper wire and secondary of 110 turns of #30 B & S D.C.C. copper wire. Connections to be brought out as indicated. See Fig. 4.

3. Calibrate instrument on copy of form provided in the Question Sheet.

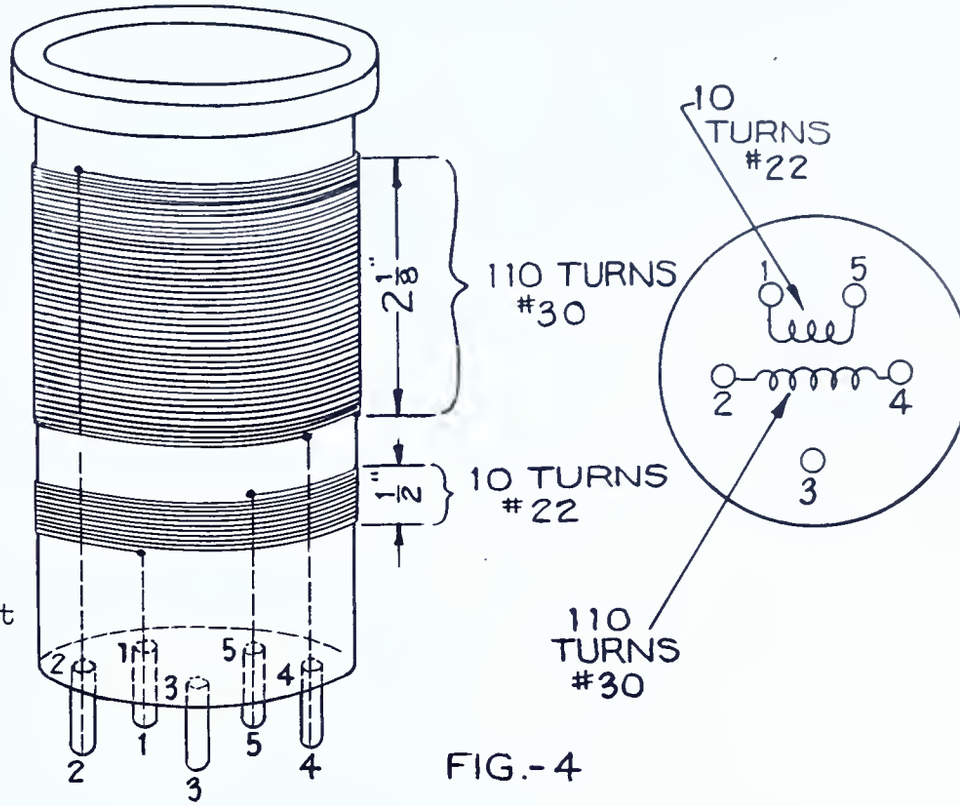

FIG.-4

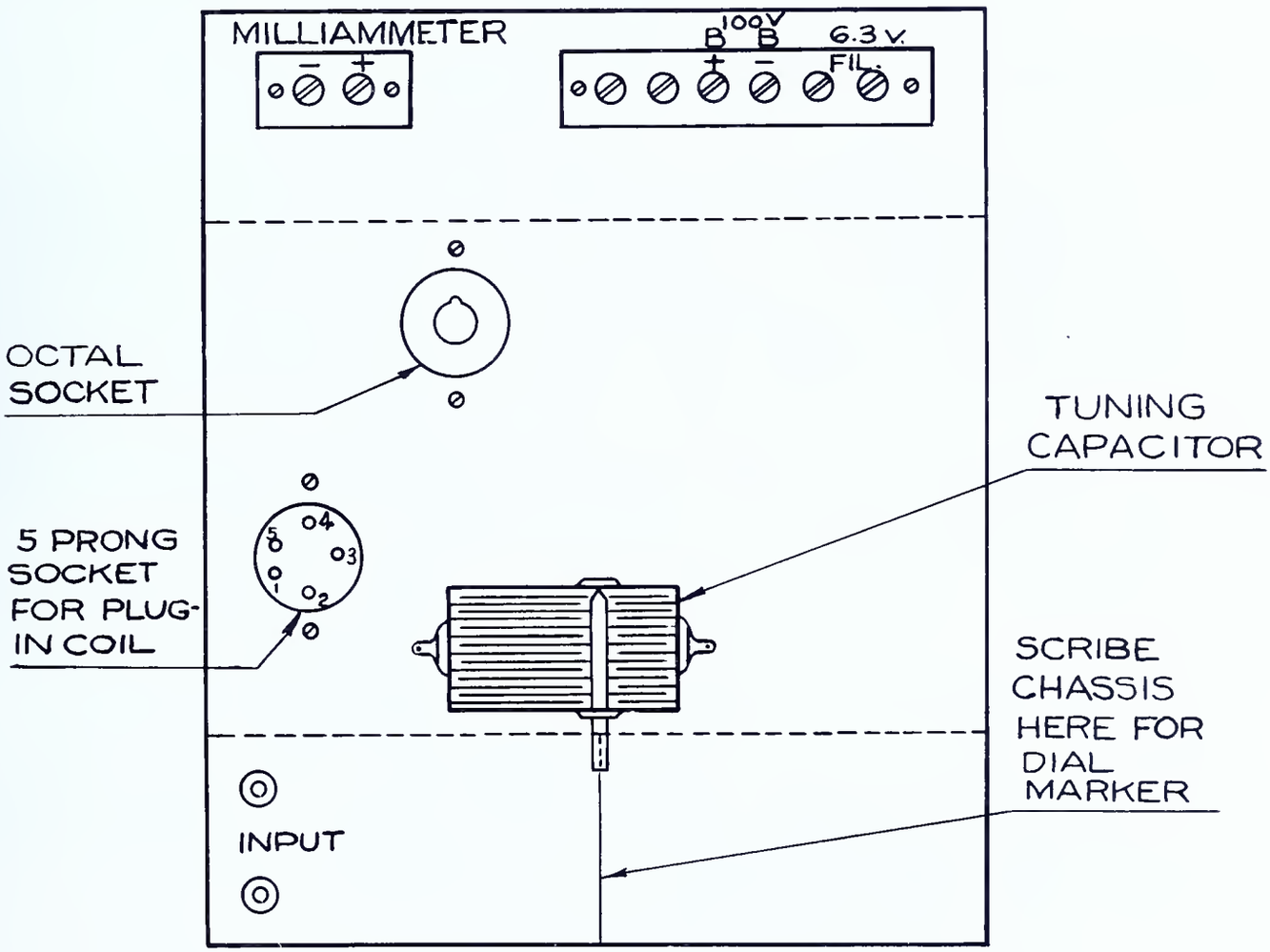

"CHASSIS LAYOUT"
(TOP VIEW)

FIG.-5

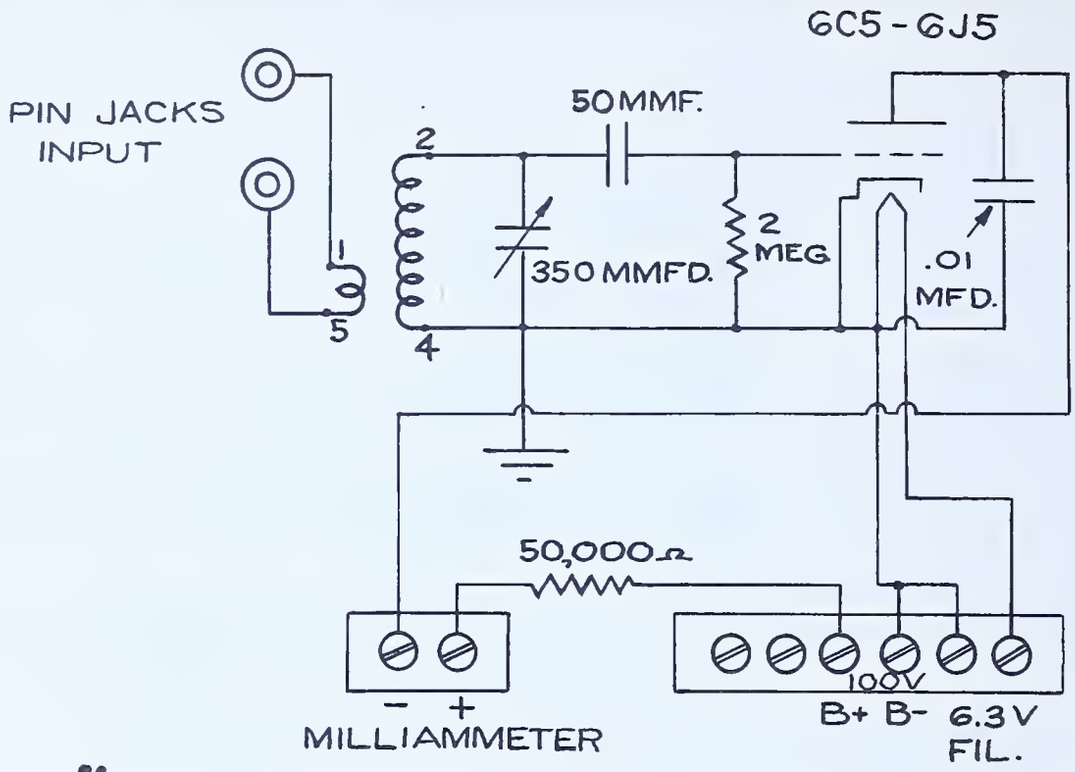

"THE ABSORPTION FREQUENCY METER"
(SCHEMATIC DIAGRAM)
FIG - 6

Tools needed:

1. Soldering iron
2. Long nose pliers
3. Diagonal pliers
4. Screw drivers
5. Socket wrenches
6. Scriber
7. Drills as required

Equipment needed:

1. 1- Signal generator
2. 1- Power supply
3. 1- #6C5 tube or equivalent triode type
4. 1- Sheet 8½" by 11" graph paper.
5. 1- Voltmeter, 0-100-500, d-c
6. 1- Ohmmeter
7. 1- Set test leads
8. 1- Milliammeter 0-5 ma.

Materials needed:

1. 1- 5" x7½" x 2" chassis, made in Job 5
2. 1- Plug-in coil form, 5 prong base, 3" length 1½" dia. preferable
3. 1- 350 mmf. variable capacitor
4. 1- 50 mmf. mica capacitor
5. 1- 2 megohm ½w. resistor
6. 1- .01 mfd. 400v paper capacitor
7. 2- Pin jacks
8. 1- 50,000 ohm resistor 1 watt
9. 1- 6 connection terminal strip, screw type
10. 1- 2 connection terminal strip, screw type
11. 1- Octal tube socket
12. 1- 5 prong socket
13. 1- 4" dial or any available size, 0-100 or 100-0
14. Rosin core solder
15. Push-back wire
16. #22 D.C.C. wire
17. #30 D.C.C. wire
18. Wire - for making connections between frequency meter and power supply

Procedure:

A. Construction:

1. Make copy of schematic circuit.
2. Make list of required parts.
3. Obtain parts from stock room.
4. Make wiring diagram, showing position of small parts beneath chassis.
5. Use chassis layout and schematic in specifications.
6. Have instructor check wiring diagram.
7. Scribe chassis as indicated in specifications.
8. Mount parts as indicated in chassis layout.
9. Wire according to prepared wiring diagram.
10. Check wiring point to point against schematic diagram.
11. Check resistance with ohmmeter of all parts of circuit point to point as indicated in form on Question Sheet. Tabulate results on copy of form in notebook.
12. Present work to instructor for inspection.
13. Prepare a plug-in coil as indicated in specifications.
14. Check coil for continuity with ohmmeter.

B. Calibration:

1. Connect proper terminals of instrument to power supply.
2. Connect milliammeter to the two connection terminal strip.
3. Insert prepared plug-in coil and 6C5 tube.
4. Connect output of r-f signal generator to input terminals (pin jacks) using test leads. Consult instructor for operation of signal generator.
5. Plug in power supply to 105-125v a-c outlet and turn switch on. Note pointer indication. This should not go off scale. If it does, see instructor.
6. Plug in signal generator to 105-125 volt a-c outlet and turn switch on.

7. Set frequency meter dial to zero.

8. Rotate signal generator slowly through 500-1500 kc range.

9. Adjust signal generator dial to position where the pointer of the frequency meter dips to its lowest reading. Decrease signal generator output to least value where dip is obtained.

10. Record on copy of tabulation form for Steps 10 and 11 the dial setting of the frequency meter and the corresponding signal generator frequency.

11. Repeat operations (8,9,10) for each of the successive 10 degree settings of the dial of the frequency meter.

12. Plot on a graph the points for each dial setting and the noted corresponding frequency reading. Use copy of form provided.

13. Draw a smooth curve touching each of these points.

C. Testing (Frequency Checking):

1. Set the signal generator to some random frequency in the range of the frequency meter.

2. Adjust frequency meter dial until greatest dip is indicated by meter.

3. Record dial reading of frequency meter on tabulation form on Question Sheet.

4. Using the calibration curve made during calibration procedure determine the frequency indicated by the dial setting obtained.

5. Check indicated value against marking on signal generator dial.

6. Proceed similarly for several random frequencies. It is suggested that for these readings the student use the frequencies of the radio stations most usually heard in his vicinity.

7. Disconnect apparatus.

8. Disassemble frequency meter.

9. Clean all parts and return them to stock room.

GRAPHS

A graph shows in a visual or "graphical" representation the relation between two mathematical quantities. See Fig. 7. The graph used for illustration shows the relation between resistance in ohms and deflection of a milliammeter used as an ohmmeter in Job 6.

The horizontal base line is scaled in terms of one quantity.

The vertical reference line is scaled in terms of the other quantity.

Every pair of values, one value on the horizontal scale and the other on the vertical scale, will be indicated by a point. See Fig. 8.

A "curve" may be drawn through several calibrating points. When errors in measurement would prevent this being a smooth curve, the curve is made smooth by drawing as close to each of the points as practical. Every horizontal value under the curve will have a corresponding vertical value.

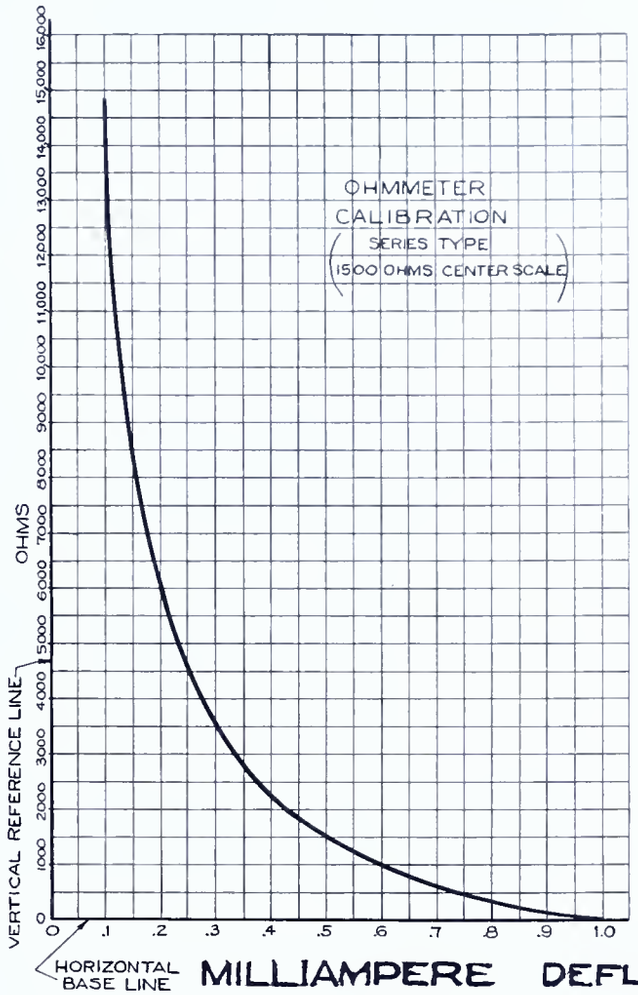

FIG.-7

In case of the ohmmeter calibration of Fig. 7, a deflection of 0.6 m.a. will correspond to 1000 ohms; Other pairs of points are 1 m.a. and 0 ohms; 0.5 m.a. and 1500 ohms; 0.3 m.a. and 3500 ohms; 0.2 m.a. and 6000 ohms. Any other known pairs may be used to lay out the curve. Then an intermediate value such as 0.4 m.a. will correspond to 2200 ohms. Other values of current will correspond to some respective values of resistance.

Care should be taken not to assume that the curve continues beyond the range of the calibration points. Consider the graph of Fig. 7. Any deflection beyond 1.0 m.a. on an extended curve will indicate negative resistance.

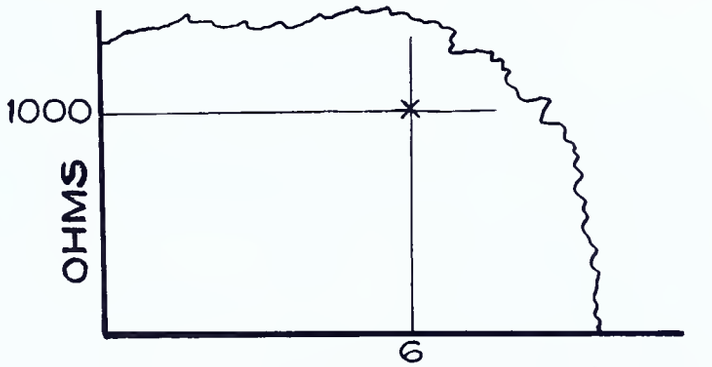

FIG.-8

QUESTIONS

Place the answers to these questions in your notebook or on form as directed by instructor.

1. What is the purpose of the frequency meter?

2. What reactions indicate that the frequency meter is set to the same frequency as the unknown?

3. Of what value is the calibration curve?

4. Explain how to make the frequency determination for a particular dial setting of the frequency meter.

5. What is meant by "coupling"?

6. What is the importance of coupling in the use of the frequency meter?

7. What is the purpose of the tube in this frequency meter?

8. Will the indicating meter dip if the unknown frequency is not within the frequency coverage of the frequency meter? Why?

9. How much coupling is required in using a frequency meter?

10. Explain how to calibrate the frequency meter dial.

11. Why is a resistance check made before connecting the power supply?

12. What effect would poor mechanical construction and abuse have on the accuracy of this instrument?

References:

Ghirardi, A. A., Radio Physics Course (Second Edition), pp. 315-321

Watson, Welsh and Eby, Understanding Radio, pp. 77-80, 432-436.

The Radio Amateur's Handbook (Any Edition), A. R. R. L., Chapter on Measurements.

The Radio Handbook (Any Edition), Editors and Engineers, Chapter on Test and Measuring Equipment.

TABULATION FORMS

RESISTANCE ANALYSIS - Step 11 of Procedure A

Points Measured	Resistance-Ohms
Grid of 6C5 to chassis	
Plate of 6C5 to chassis	
Positive milliammeter terminal to B+ terminal	
#2 terminal of coil socket to 6C5 grid	
#2 terminal of coil socket to chassis	

CALIBRATION - Steps 10 and 11 of Procedure B

Dial Setting	Frequency-KC.
0	
10	
20	
30	
40	
50	
60	
70	
80	
90	
100	

GRAPH - Step 12 of Procedure B

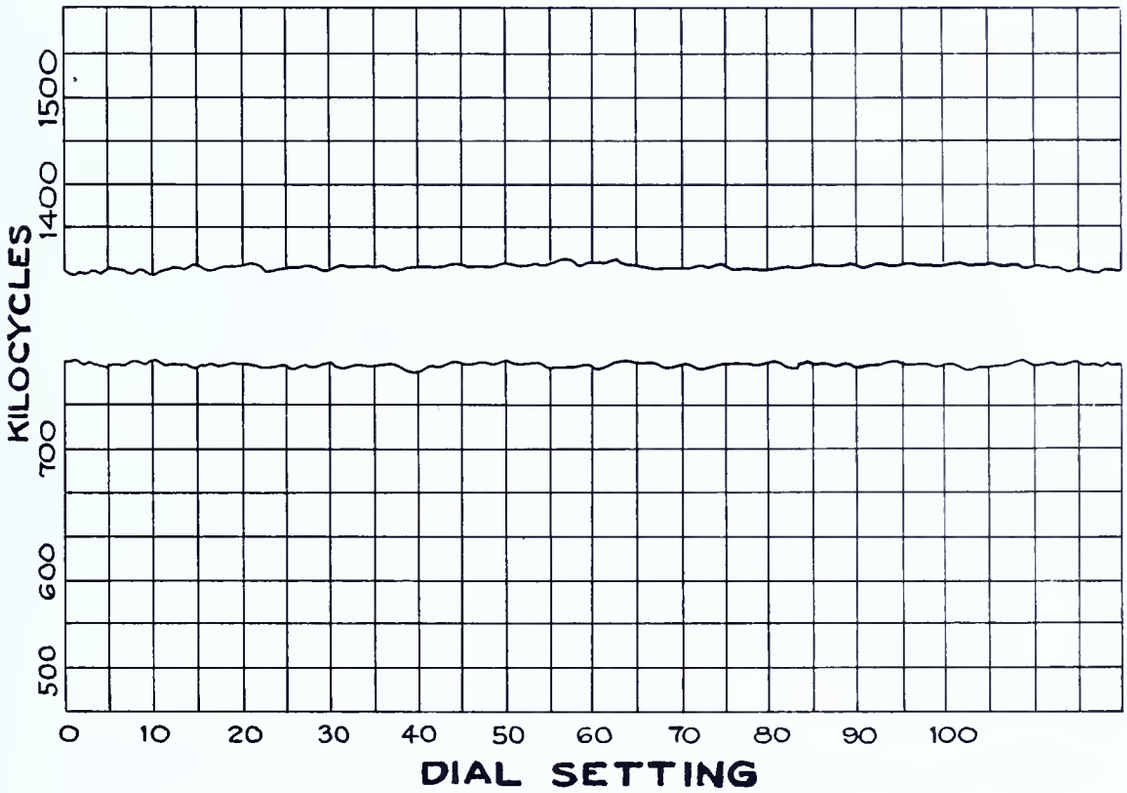

FIG.-9

FREQUENCY CHECKING

Test Procedure Test #	Dial Setting Frequency Meter	Frequency (KC) from Calibration Curve	Frequency (KC) from Signal Generator
1			
2			
3			
4			
5			
6			
7			
8			

JOB 20

A ONE TUBE REGENERATIVE RECEIVER

Regeneration is one way of obtaining additional signal strength from a radio frequency signal. The simplest form of the regenerative receiver requires but one tube. The single tube regenerative receiver will give results comparable to the non-regenerative receiver employing several tubes.

A ONE TUBE REGENERATIVE RECEIVER

General Information:

A radio transmitter radiates an r-f signal known as its carrier frequency. A graphic representation of the r-f signal is shown in Fig. 1. Sound frequency impulses (20 to 20,000 cycles per second) as shown in Fig. 2 modify the carrier frequency output. This process is known as modulation. The resulting amplitude modulated wave is indicated in Fig. 3.

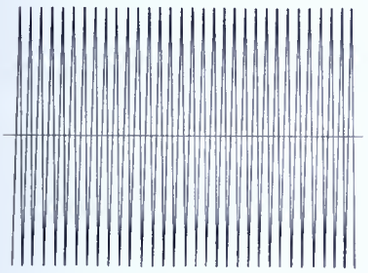

RADIO OR CARRIER FREQUENCY
FIG. - 1

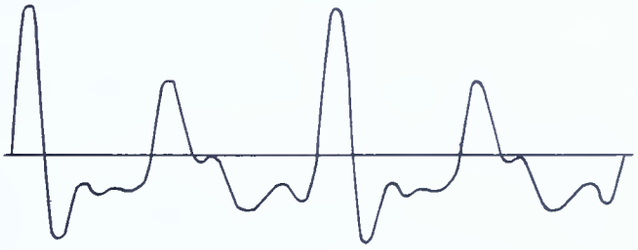

AUDIO FREQUENCY
FIG.-2

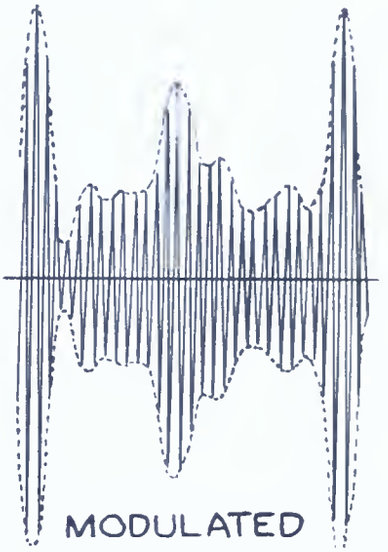

MODULATED RADIO FREQUENCY
FIG.- 3

Since there are many transmitters, each with its modulated carrier frequency, the radio signals in space and in the antenna circuit of the receiver are simultaneously of many different frequencies. Currents of these many frequencies flow in the primary winding of a transformer known as the antenna coil. These currents induce voltages of the same frequencies in the secondary.

A variable capacitor connected across the secondary coil forms a series circuit with respect to the voltage induced from the primary. This circuit when tuned by adjusting the position of the variable capacitor will become resonant to one frequency which may be that of one of the induced signal voltages. Opposition to current flow for any frequency is least at resonance and the voltage across the coil or capacitor is greatest at the same time. Tuning, therefore, increases the desired signal voltage and decreases the voltage of other frequencies.

Detection or demodulation is the process whereby the audio, or sound, frequency impulses (Fig. 2) are extracted from the combined or modulated wave. This may be done by use of a vacuum tube or crystal whose output varies with the modulated wave. The one tube regenerative receiver constructed in this unit utilizes a "grid leak" detector.

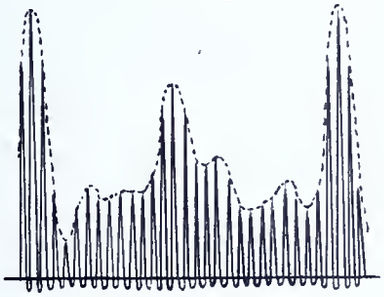

DETECTED WAVE
FIG.-4

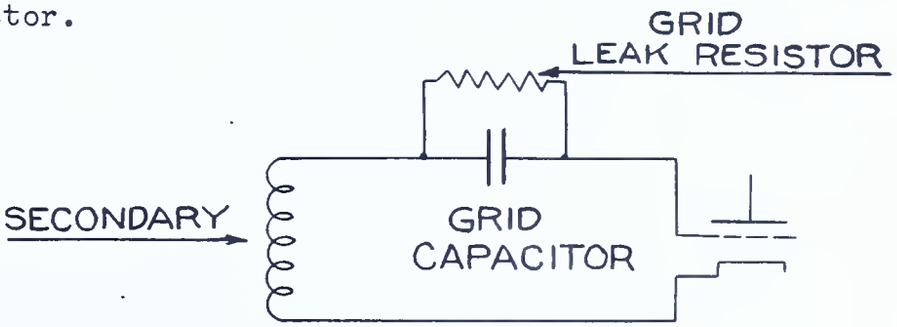

"GRID LEAK DETECTOR"
FIG.-5

Detector action permits current to flow readily in one direction and flow poorly or not at all in the other direction. Examine the grid leak detector circuit of Fig. 5 taken from the schematic diagram of Fig. 8. The detector action causes the wave of Fig. 3 to be changed to produce the wave of Fig. 4. The solid line of this figure indicates the voltage across the grid leak resistor when there is no grid capacitor in the circuit. The grid capacitor will tend to hold the voltage close to the dotted line which is seen to be similar to the original sound frequency.

A characteristic of the grid leak detector is that it is sensitive to weak signals but will not handle a large signal input.

Variations of the grid voltage cause corresponding changes of the plate current. The a-f part of the plate current will actuate the phones and be reproduced as sound.

The modulated r-f part of the plate current will induce voltage in the grid circuit when coupled as in Fig. 6. The tickler coil L_3 is coupled to the secondary L_2 so that the signal is boosted by the feedback from the plate circuit. The capacity between plate and grid increases coupling.

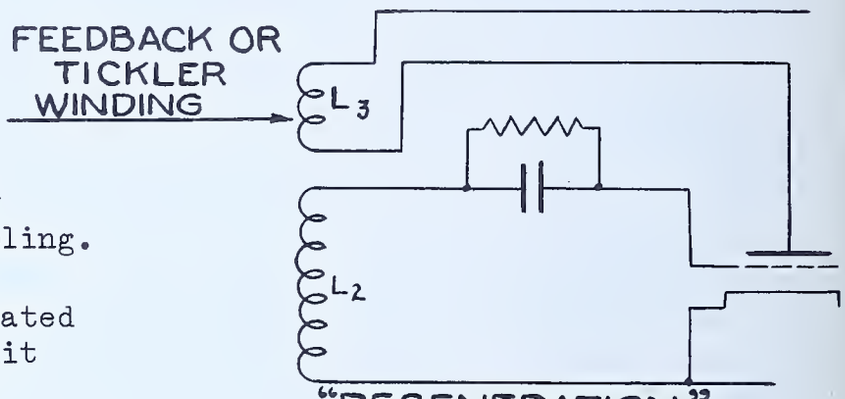

"REGENERATION"
FIG.-6

Amplification of the signal repeated again and again in the one tube circuit is known as regeneration or feedback.

A variable resistor or potentiometer may be used to control the d-c voltage as applied to the plate element of the tube. This may be used to control the tendency of a regenerative receiver to sing or oscillate.

Before oscillation there will be heard a slight hiss in the phones connected in the plate circuit. At the point of oscillation there will usually be a sudden click or popping sound. The regeneration should just reach this condition when searching for weak stations.

The tuning control is moved until a whistle is heard. This whistle will start with a high pitch and drop as the tuning control is moved until the whistle will stop and then start and gradually increase in pitch until no longer heard. Tune to the stop or zero beat point. Here the frequency of oscillation is the same as that of the transmitter and the transmitter is tuned in by the receiver. When tuned, turn back regeneration control out of oscillation and then up just shy of oscillation.

The regenerative detector is very sensitive, tunes sharply, and produces a high gain in signal strength. Regenerative feedback is an important consideration in r-f and a-f amplifiers. It is usually eliminated from amplifiers as much as possible in order to reduce distortion and tendency of the receiver to squeal.

Specifications:

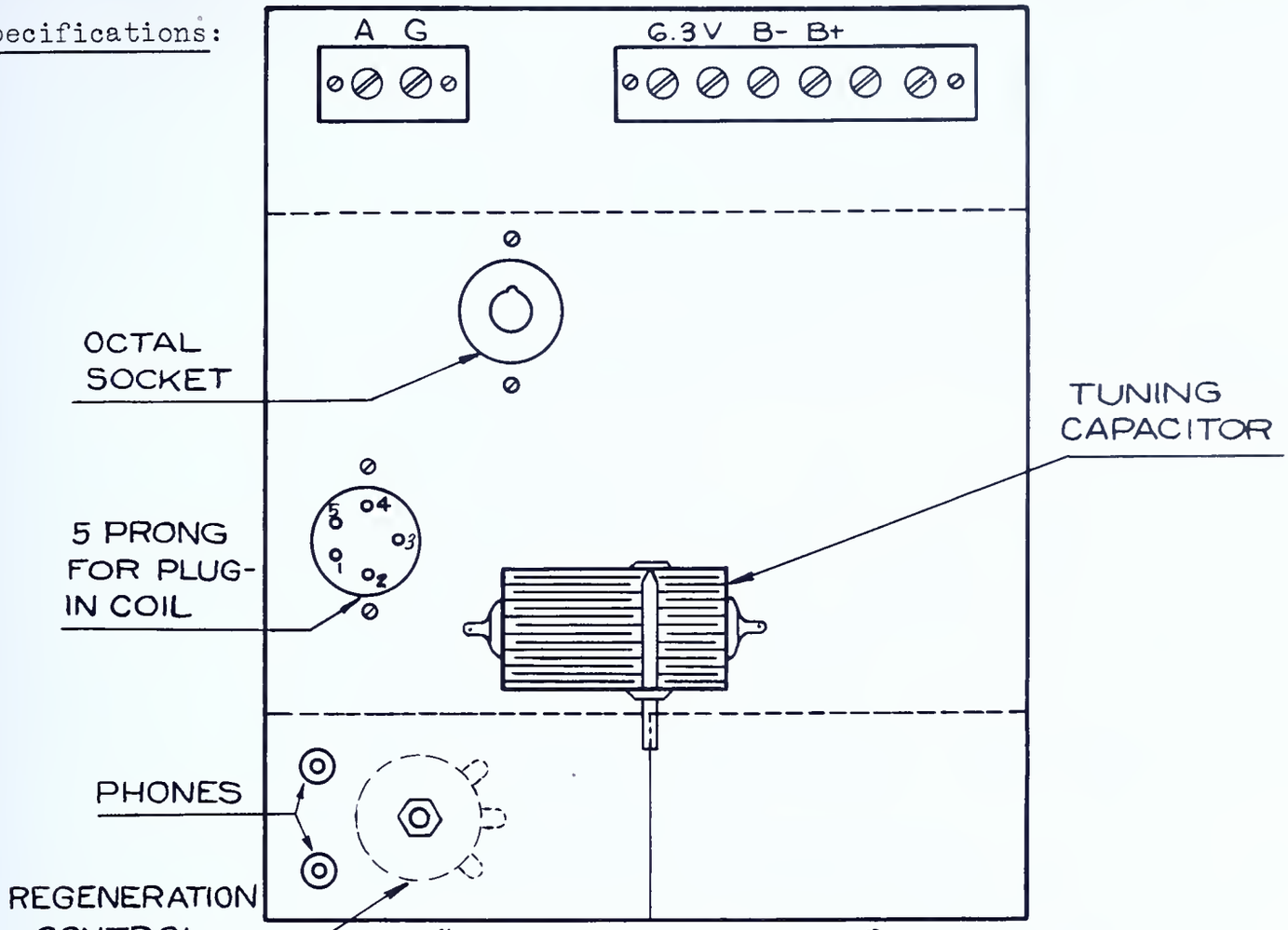

"CHASSIS LAYOUT"
(TOP VIEW)
FIG.-7

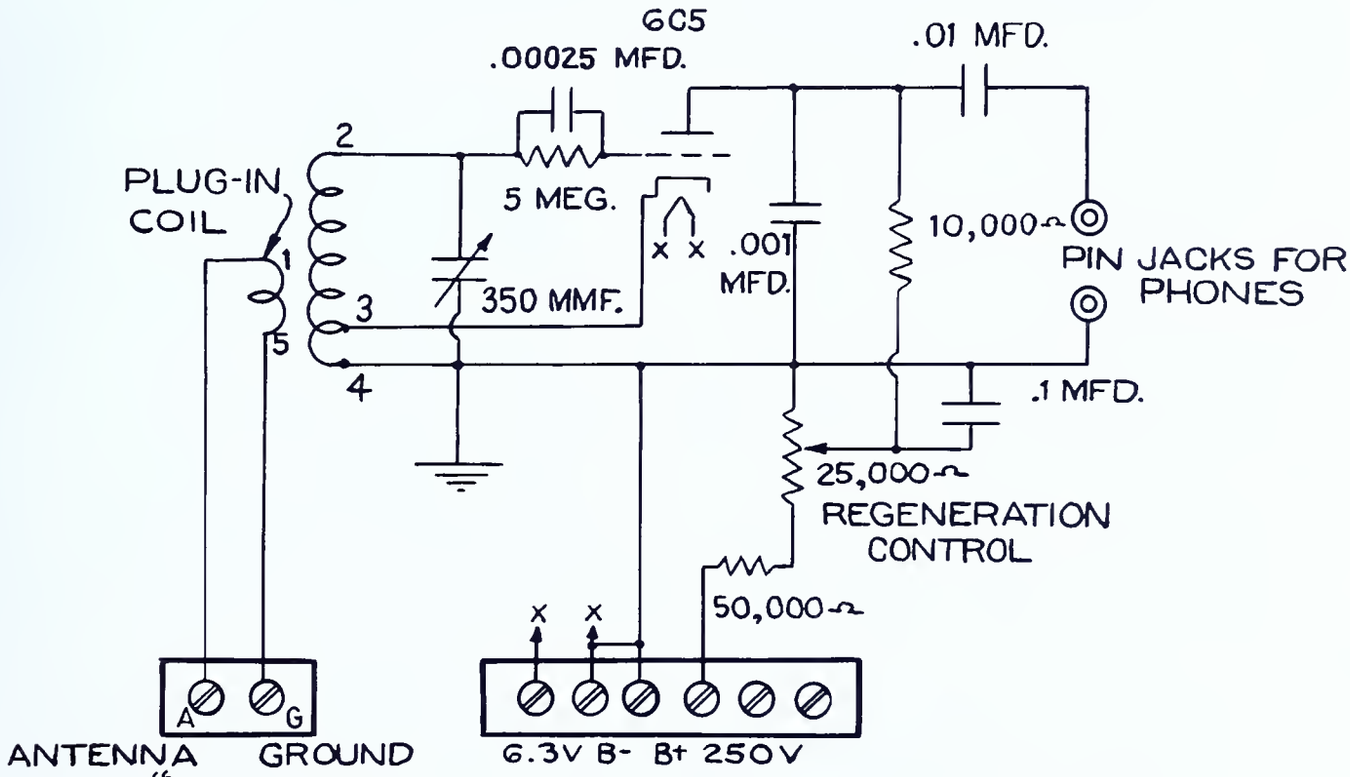

"ONE TUBE REGENERATIVE RECEIVER
(SCHEMATIC DIAGRAM)
FIG.-8

1. Potentiometer to be connected so that clockwise rotation will produce oscillation.

2. Coil to be wound with 20 turns of #26 B & S insulated copper wire and 110 turns #30 B & S insulated copper wire. Adjust secondary turns by removing turns until whole broadcast band is covered by variable capacitor. Adjust tickler turns so that oscillation occurs about center of regeneration control setting.

Tools needed:

1. Soldering iron
2. Long nose pliers
3. Diagonal cutters
4. Screw drivers (set)
5. Socket wrenches (set)

Equipment needed:

1. Headphones
2. Power supply
3. Voltmeter, 0-100-500, d-c
4. Ohmmeter

Materials needed:

1. 1- 5" x 7½" x 2" chassis, as prepared in Job 5.
2. 1- Octal socket
3. 1- 5 prong socket (for coil)
4. 1- 5 prong coil form
5. 1- 25,000 ohm potentiometer (regeneration control)
6. 1- 50,000 ohm 1 watt resistor
7. 1- 10,000 ohm carbon resistor
8. 1- 5 megohm carbon resistor
9. 1- 350 mmf. variable capacitor
10. 1- .00025 mfd. mica capacitor, 400 w.v.*
11. 1- .001 mfd. mica capacitor, 400 w.v.
12. 1- .01 mfd. paper capacitor, 400 w.v.
13. 1- .1 mfd. paper capacitor, 400 w.v.
14. 1- 6C5 tube
15. 2- Pin jacks (for phone tips)
16. 1- 2 connection terminal strip, screw type
17. 1- 6 connection terminal strip, screw type
18. 1- knob (for potentiometer)
19. 1- dial (for variable capacitor)
20. #26 B & S insulated copper wire
21. #30 B & S insulated copper wire
22. Push-back wire
23. Hardware as needed
24. Rosin core solder
25. Wire - for connecting receiver to power supply.

*Working voltage

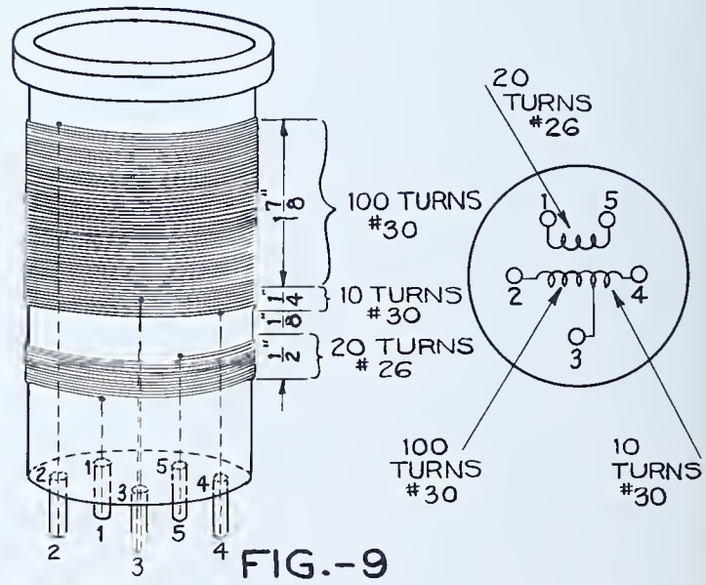

FIG.-9

Procedure:

1. Secure tools and materials from stock room. Obtain equipment from stock room as needed.

2. Prepare a wiring diagram from the schematic and chassis layout. Have instructor check diagram.

3. Mount parts on chassis.

4. Wire according to wiring diagram and schematic diagram.

5. Label terminal strip connections.

6. Wind coil as per specifications and check continuity.

7. Measure the resistance from each tube socket contact and terminal strip connection to the chassis or ground connection. Record results in notebook on a copy of form shown on Question Sheet.

8. Insert tube and coil in their sockets.

9. Have instructor inspect job.

10. Connect external leads from receiver to power supply, and make antenna and ground connections to receiver. Turn on power supply.

11. Adjust controls to receive a station.

12. Rotate potentiometer to be sure that clockwise movement produces oscillation. Correct if necessary by reversing the end leads.

13. Adjust coil windings so that the entire broadcast band is covered and the maximum regeneration is at about center of the control. Remove a few turns from 100 turn section of coil if higher frequency stations are not received. Add turns if lower frequency stations are missing.

14. When the receiver is oscillating, touch the grid connection to the tube and make note of any sound heard in the phones or speaker. (See form on Question Sheet.)

15. Measure the voltage between the plate and cathode:
    (a) when tuned to a station
    (b) when not tuned to a station

16. Measure the voltage between the grid and cathode:
    (a) when tuned to a station
    (b) when not tuned to a station

17. Note sound heard in phones for both parts of Steps 15 and 16.

18. Have the recorded results checked by instructor.

19. Shut off power supply.

20. Remove tube and coil.

21. Disconnect external connections.

22. Dismantle receiver and return parts to stock room.

QUESTIONS

Place the answers to these questions in your notebook or on form as directed by instructor.

1. What stations did the receiver pick up with the coil built to specifications?
2. If set were wired according to diagram and checked with multimeter but still did not regenerate, what changes should be made?
3. What would the normal plate voltage be with the receiver in operating condition but not tuned?
4. How did plate voltage change when receiver was tuned to a particular station?
5. What was the normal grid voltage when not tuned?
6. How did grid voltage change when receiver was tuned to a station?
7. In what way did the use of the voltmeter affect reception?
8. What is the function of the grid leak?
9. What is the function of the grid capacitor?
10. How is the "feedback" attained in this circuit?
11. What are the disadvantages of this circuit?
12. What other features are undesirable?
13. What are the advantages?
14. Did regeneration improve the sharpness of tuning?
15. Did regeneration distort the signal?
16. What is meant by the carrier wave in radio transmission?
17. What is meant by modulation?
18. How are music and speech sent by radio?
19. Explain the action of the grid leak.
20. How does the regenerative differ from the ordinary grid leak detector?
21. Why does the tuned circuit allow only one frequency to pass at a time?
22. In what ways does regeneration help the grid leak detector?
23. How does the potentiometer control regeneration?
24. What kind of current is flowing in the plate circuit when an a-c signal is impressed on the grid circuit?

25. What happens to plate current when plate voltage is lowered?

26. What happens to plate current when grid bias is made less negative?

27. Does the incoming signal cause the plate current to increase or decrease?

28. Explain the whistle obtained when tuning by the zero beat method.

29. Did one position of regeneration control serve for all frequencies?

References:

Ghirardi, A. A., Radio Physics Course (Second Edition), pp. 490-506.

Watson, Welsh and Eby, Understanding Radio, pp. 130-237, 391-399.

Timbie, W. H., Elements of Electricity (Third Edition), pp. 484-489.

The Radio Amateur's Handbook (Any Edition), A. R. R. L., Chapter on Receiver Construction.

TABULATION FORMS

RESISTANCE ANALYSIS - Step 7

Ohmmeter Connections	Ohms
Grid of tube to chassis Plate to chassis - Regeneration control full to left Coil socket #2 terminal to grid Coil socket #2 terminal to chassis	

OSCILLATION FINGER TEST - Step 14

Response to touching grid leak.	

VOLTAGE AND SOUND TEST - Steps 15 and 16

Test	Volts	Sounds
Plate to cathode tuned to a station	DO NOT WRITE IN THIS CHART	
Plate to cathode untuned		
Grid to cathode tuned to a station	COPY FORM IN NOTEBOOK	
Grid to cathode untuned		

JOB 21

A THREE TUBE RECEIVER

This receiver consists of the single tube regenerative unit built in the previous job with two stages of audio amplification added for increased signal strength.

A THREE TUBE RECEIVER

General Information:

A three tube receiver, capable of operating a loud speaker, is made by adding two stages of audio amplification to the regenerative detector.

A 6SJ7 pentode tube is used as the regenerative detector. This tube gives a higher amplification than the 6C5 used in the one tube receiver.

The screen grid of the 6SJ7 is connected so that part of the signal is fed back through the 0.1 mfd. capacitor bypassing the screen grid into the feedback winding 4-3 of tuning coil 4-2 (see Fig. 2). When the voltage on the screen grid is increased by adjusting the regeneration control, the amplification and feedback voltage increase causing regeneration of oscillation.

This circuit is said to be electron coupled because the regenerative circuit uses the screen as the feedback device and the plate is coupled to the screen only by the electron stream within the tube.

The plate of the 6SJ7 detector is connected to a filter circuit consisting of a 50,000 ohm resistor and two .00025 mfd. capacitors which serve to filter out the radio frequency signal. The audio frequency signal passes through the 50,000 ohm resistor and the .01 mfd. coupling capacitor to the volume control.

The volume control setting determines how much of this signal is applied to the grid of the 6C5 first audio amplifier. When the rotating arm of the volume control is at ground potential, no signal is fed into the grid. When the arm is turned to the side of the control connected to the coupling capacitor, the maximum signal is fed into the grid.

The 6C5 tube is resistance coupled to the 6F6 power amplifier which operates the speaker.

This type of receiver gives satisfactory results in the hands of a good operator. Its main disadvantage is lack of selectivity where strong signals are concerned. The selectivity of a receiver is its ability to tune in one station clearly and tune out the other stations.

Code signals (generally called "cw" for continuous wave) originating thousands of miles from the receiver can be received. The receiver's ability to pick up voice signals (modulated cw) is limited to a range of a few hundred miles.

Specifications:

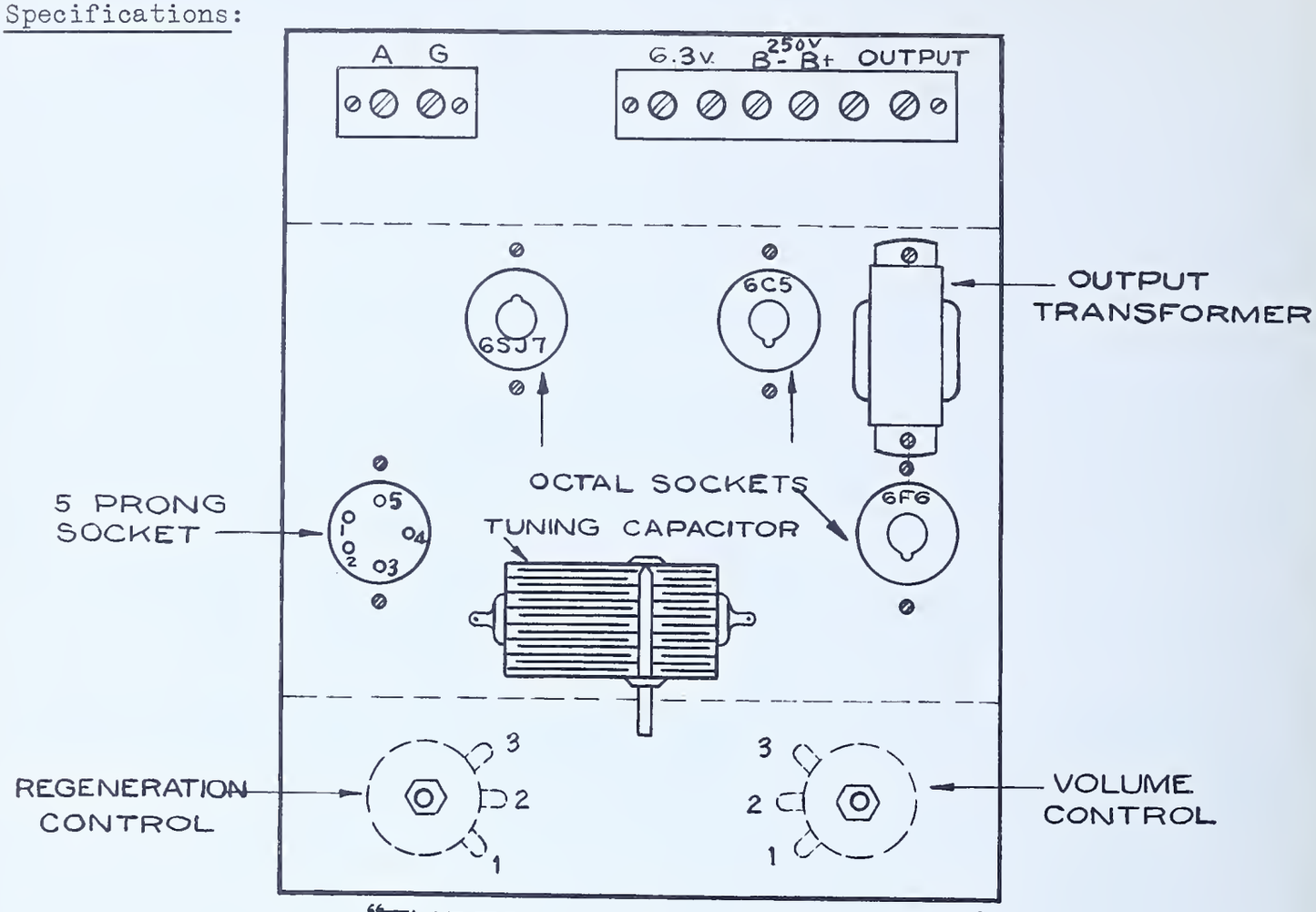

"THREE TUBE RECEIVER"
CHASSIS LAYOUT
(TOP VIEW)

FIG.-1

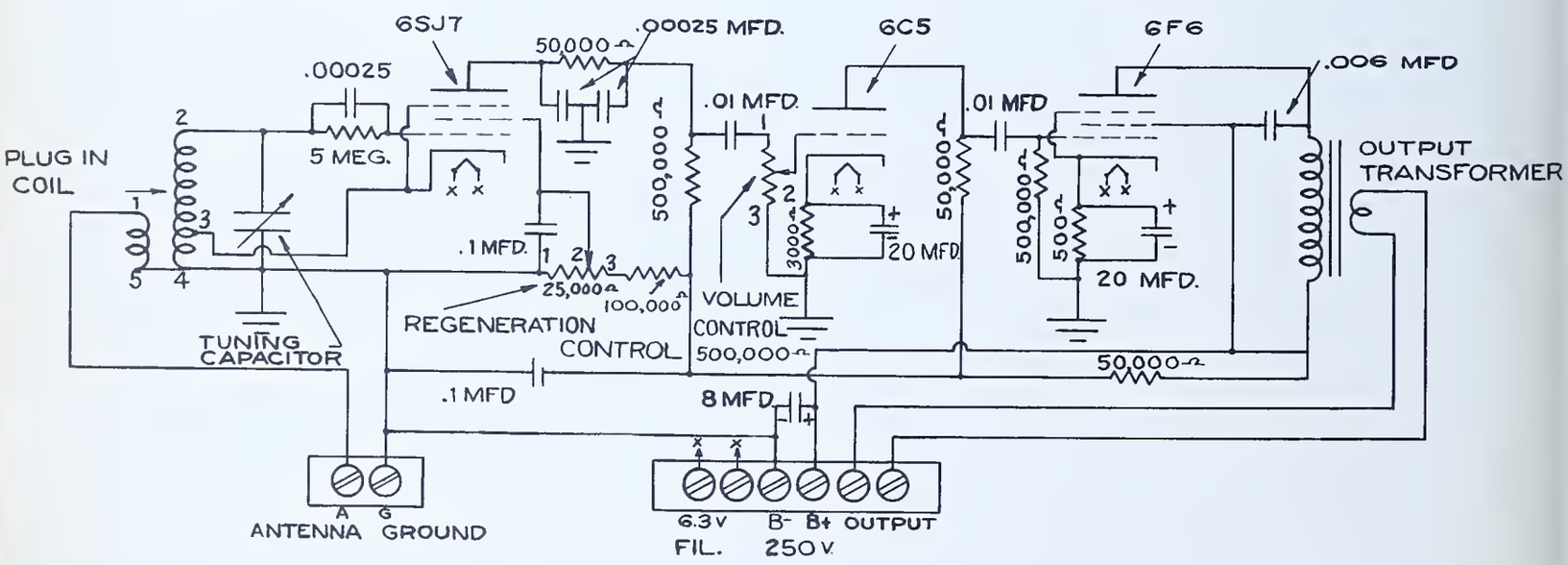

SCHEMATIC DIAGRAM
FIG.-2

Specifications: (continued)

1. Mount parts on chassis as shown in layout, Fig. 1.
2. Wire parts according to schematic diagram, Fig. 2.
3. Test parts before installation.
4. Make wiring as neat and short as possible.
5. Plug-in coil to be used should be same coil as wound in Job 20.
6. Make resistance analysis according to form on Question Sheet.
7. Make voltage analysis according to form on Question Sheet.
8. Tune in and log as many stations as possible.

Tools needed:

1. Soldering iron
2. Long nose pliers
3. Diagonal cutters
4. Screw driver (set)
5. Socket wrenches (set)

Equipment needed:

1. Ohmmeter
2. Voltmeter, 0-100-500 volts, d-c
3. Power supply

Materials needed:

1. Rosin core solder
2. 1- 5" x $7\frac{1}{2}$" x 2" metal chassis made in Job 5.
3. Push-back wire
4. 3- Octal sockets
5. 1- 5 prong socket (for coil)
6. 1- plug-in coil made in Job 20.
7. 1- 25,000 ohm potentiometer
8. 1- 500,000 ohm potentiometer
9. 1- 5 megohm resistor
10. 1- 0.1 megohm resistor
11. 2- .5 megohm resistor
12. 3- .05 megohm resistor
13. 1- 3000 ohm resistor
14. 1- 500 ohm resistor
15. 1- .00035 mfd. tuning capacitor
16. 3- .00025 mfd. mica capacitor
17. 1- .006 mfd. tubular capacitor, 400 w.v.
18. 2- .01 mfd. tubular capacitor, 400 w.v.
19. 2- 0.1 mfd. tubular capacitor, 400 w.v.
20. 1- Output transformer (6F6 to 6 ohm voice coil)
21. 2- 20 mfd. electrolytic capacitor, 25 w.v.
22. 1- 6 terminal connecting strip, screw type
23. 1- 2 terminal connecting strip, screw type
24. 2- knobs
25. 1- 6SJ7 tube
26. 1- 6C5 tube
27. 1- 6F6 tube
28. 1- Permanent magnet dynamic speaker, 12"
29. 1- Dial
30. Tie points as required
31. 16- $\frac{1}{4}$" 6-32 R.H. machine screws
32. 16- 6-32 hex. nuts
33. 16- 6-32 lock washers
34. 1- 8 mfd. capacitor, 450 volts
35. Wire - for making connections between receiver and power supply.

Procedure:

1. Obtain parts and tools from stock room. Get test equipment from stock room as needed.

2. Test resistors, capacitors and tubes.

3. Consult tube manual for socket connections of tubes to be used.

4. Make wiring diagram using schematic diagram and chassis layout given in specifications. Have instructor check diagram.

   Note: Be sure wiring to volume and regeneration controls conforms to numbers indicated on diagram.

5. Mount sockets, regeneration control, volume control, tuning capacitor, terminal strips, and output transformer on chassis.

6. Wire in resistors and capacitors according to wiring diagram.

7. Wire remaining connections and solder all joints. Have instructor check wiring.

8. Make resistance analysis according to form on Question Sheet. Record results on copy of form in notebook.

9. Connect receiver to power supply to secure voltages as indicated on terminal strip. Have instructor check connections.

10. Insert plug-in coil and tubes in proper sockets. Check wiring diagram to make sure tubes are in correct sockets.

11. Connect aerial, ground, and permanent magnet dynamic speaker to receiver as indicated in schematic diagram.

12. Connect power supply plug to 105-125 volt a-c outlet.

13. Turn on power supply.

14. Test and tabulate voltages as indicated in form on Question Sheet. Record results on copy of form in notebook.

15. Operate controls of receiver in same fashion as for one tube receiver. Volume control should be turned to maximum position until station is found and then retarded to keep volume at acceptable level.

16. Tune in as many stations as possible. Record the dial setting for each station in notebook using a copy of the form found on Question Sheet.

17. Have instructor check operations of radio.

18. Store this radio for use in Job 22, if time allows; otherwise, dismantle, clean, and return parts to stock room.

QUESTIONS

Place the answers to these questions in your notebook or on form as directed by instructor.

1. Why is the 6SJ7 tube used for a detector instead of the 6C5?

2. Why is the detector circuit said to be electron coupled?

3. What is the purpose of the .00025 mfd. capacitors and 50,000 ohm resistor in the plate circuit of the 6SJ7 tube?

4. What type of coupling is used between the 6C5 and 6F6 tubes?

5. Will maximum or minimum volume be obtained when the rotating arm of the volume control is turned to the ground side of the potentiometer?

6. With this receiver, which can be received over longer distances:- c.w. or modulated c.w.?

7. What is a disadvantage of this type of receiver?

8. In what part of the circuit is the regeneration control connected?

9. How is the feedback controlled?

10. What type of coupling is used between the 6F6 tube and the speaker?

References:

Watson, Welsh and Eby, Understanding Radio, pp. 399-415.

The Radio Amateur's Handbook (Any Edition), A. R. R. L., Chapter on Receiver Construction.

TABULATION FORMS

RESISTANCE ANALYSIS - Step 8

Points measured	Resistance-Ohms
Control grid of 6SJ7 tube to stator of tuning capacitor Plate of 6SJ7 tube to B+ of terminal strip Screen grid of 6SJ7 tube to chassis Screen grid of 6SJ7 tube to B+ of terminal strip Grid of 6C5 tube to chassis Cathode of 6C5 tube to chassis Plate of 6C5 tube to B+ of terminal strip Grid of 6F6 tube to chassis Cathode of 6F6 tube to chassis Plate of 6F6 tube to B+ of terminal strip Screen grid of 6F6 tube to B+ of terminal strip Plate of 6SJ7 tube to grid of 6C5 Plate of 6C5 tube to grid of 6F6	DO NOT WRITE IN THIS CHART— COPY FORM

VOLTAGE ANALYSIS - Step 14

Points measured	Voltage
Control grid of 6SJ7 tube to chassis Screen grid of 6SJ7 tube to chassis Plate of 6SJ7 tube to chassis Cathode of 6C5 tube to chassis Plate of 6C5 tube to chassis Control grid of 6C5 tube to chassis Control grid of 6F6 tube to chassis Cathode of 6F6 tube to chassis Screen grid of 6F6 tube to chassis Plate of 6F6 tube to chassis B+ of terminal strip to chassis	DO NOT WRITE IN THIS CHART— COPY FORM

DIAL SETTING - Step 16

Dial Setting	Station
DO NOT WRITE IN THESE SPACES COPY THIS FORM IN YOUR NOTEBOOK	

JOB 22 — Optional

A RADIO FREQUENCY AMPLIFIER

In the amplification of signals in a radio receiver increased sensitivity and selectivity may be obtained by the use of a radio frequency amplifier which precedes the detector and audio frequency amplifier stages.

A RADIO FREQUENCY AMPLIFIER

General Information:

The radio frequency amplifier steps up the strength of r-f signals before detection. For that reason, the antenna is connected to the input of the r-f stage while the output is connected to the detector. See Fig. 1.

Screen grid or pentode amplifier tubes are generally used in r-f stages because of their high amplification and stable operation. The term "stage" is applied to an r-f amplifier that uses one tube. Thus a two stage amplifier would employ two tubes.

The r-f stage may employ no resonant (tuned) circuits. See Fig. 1. This type of amplifier stage is called an untuned stage and will amplify radio frequencies uniformly within certain ranges. The amount of amplification depends largely on the tube used.

By using a resonant (tuned) circuit in conjunction with the r-f amplifier stage, the particular desired signal may be selected and amplified to a much greater degree than is possible with the untuned stage. Undesired signals are suppressed by the resonant circuit. Since this is a desirable condition, most r-f amplifiers employ resonant circuits. Fig. 2 illustrates a tuned r-f stage.

When the tuned r-f stage is connected to the three tube receiver, the receiver's ability to pick up weak signals is greatly improved. The selectivity of the receiver is also increased so that the desired signal may be heard with less interference from other signals.

The r-f amplifier functions as follows: (Refer to Fig. 1) The r-f signal from the antenna is coupled to the grid of the 6K7 by the .001 mfd. capacitor. This capacitor isolates the grid from d-c or a-c power voltages which may accidentally be applied to the antenna and thus prevents damage to the tube. The 10,000 ohm resistor connected between grid and chassis provides an electrical path for electrons to flow between grid and chassis but does not short out the r-f signals. The r-f signals are amplified by the tube so they are of much greater strength in the plate circuit. The plate is connected to the primary winding of the r-f coil in the three tube receiver so that the amplified signal is selected by the tuned circuit of that coil before it is demodulated. See Fig. 5

The 0.1 mfd. capacitor connected between cathode of the 6K7 and the chassis provides a low impedance path for r-f signals, and is called an r-f bypass capacitor.

The voltage drop across the 300 ohm resistor connected between the cathode of the 6K7 and the sensitivity control is used to supply a minimum bias voltage for the tube. This is necessary when the sensitivity control is set for zero resistance. The 25,000 ohm variable resistor indicated as the sensitivity control makes it possible to vary the amount of bias voltage on the tube. This varies the sensitivity of the r-f stage and makes it possible to reduce the amplification of the stage. This is a very desirable function because strong signals often cause "blocking" or distortion in the detector stage.

The 50,000 ohm resistor connected between the screen grid of the 6K7 and the B+ 250 volt connection drops the voltage from 250 volts to a suitable value for the screen grid of the tube.

The 0.1 mfd. capacitor connected between screen grid and chassis provides a low impedance path for r-f signals between those two points and maintains a constant d-c voltage on the screen grid.

The circuit in Fig. 2 functions in similar fashion with the exception that an r-f transformer (plug-in coil) and tuning capacitor are used in a resonant circuit that selects and amplifies the signal of the resonant frequency.

A receiver employing one or more stages of tuned radio frequency amplification before the detector and audio stages is called a t-r-f receiver.

If sufficient amplification is accomplished in the tuned radio frequency stages, the detector need not be of the regenerative type since additional amplification is not needed.

Specifications:

1. To change the circuit of the three tube receiver as shown in Fig. 3 so that it will operate with the r-f amplifier.

2. To construct an untuned r-f amplifier stage according to the schematic diagram in Fig. 1 and chassis layout in Fig. 4.

3. To operate the three tube receiver and untuned r-f amplifier.

4. To convert the untuned r-f amplifier to a tuned r-f amplifier stage according to schematic diagram of Fig. 2.

5. To operate the three tube receiver and tuned r-f amplifier.

6. Chassis and plug-in coil are to be of the same type as used in Job 21.

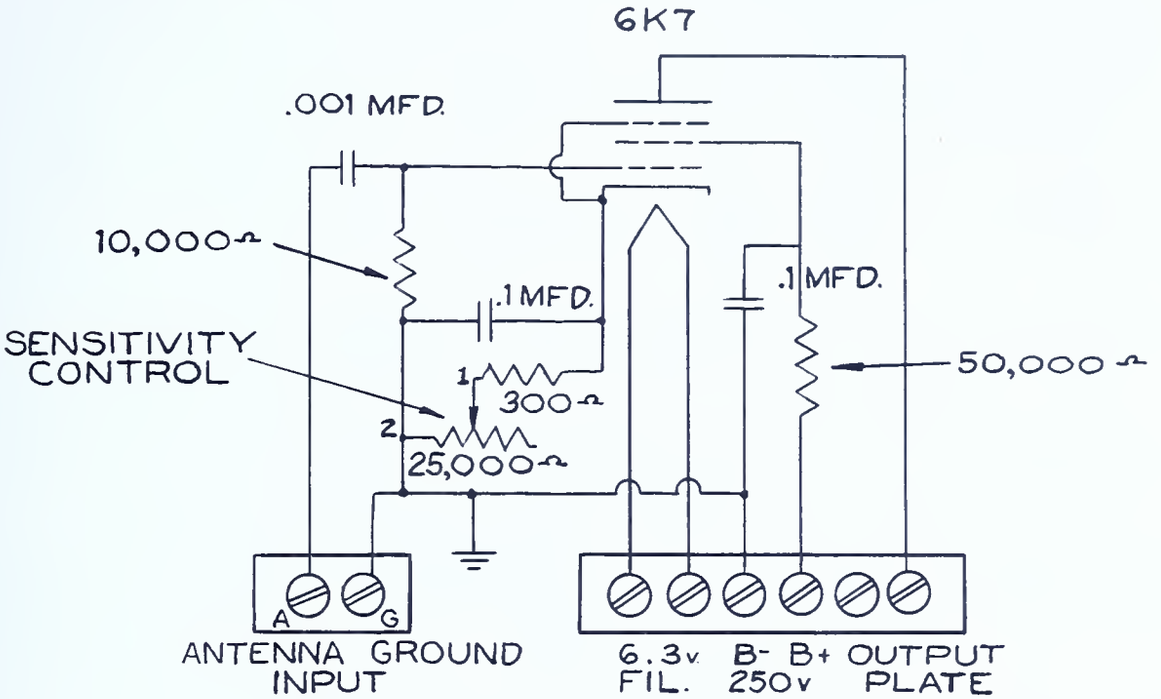

SCHEMATIC DIAGRAM- UNTUNED RF STAGE
FIG.-1

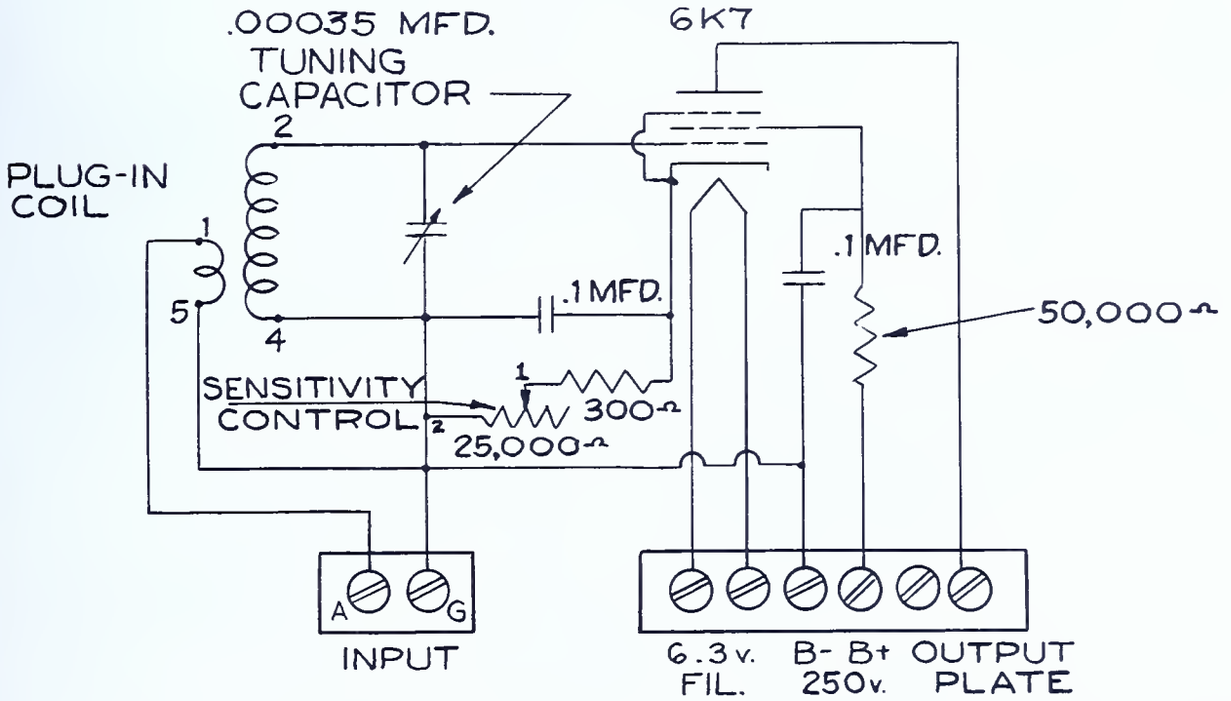

SCHEMATIC DIAGRAM- TUNED RF STAGE
FIG.-2

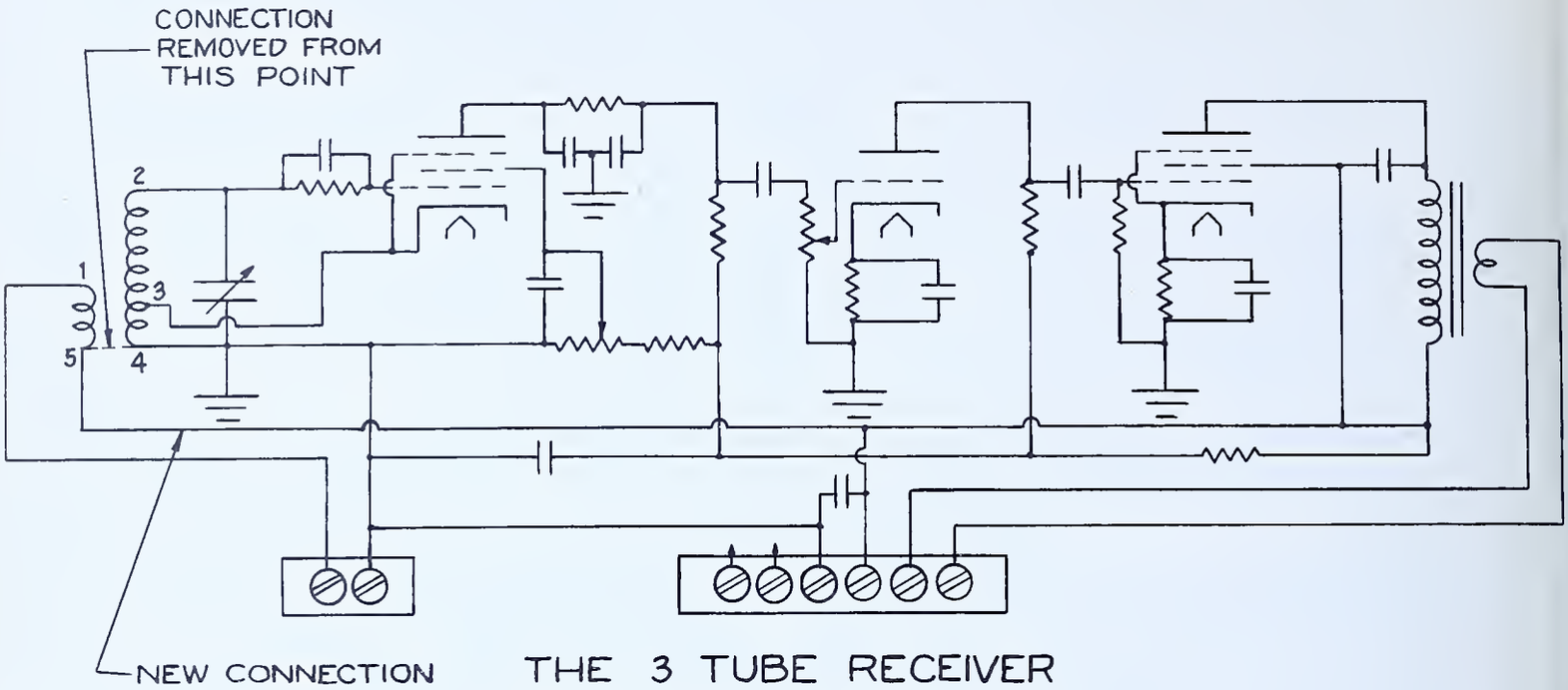

THE 3 TUBE RECEIVER
ADAPTED FOR USE WITH THE
R-F AMPLIFIER
FIG.-3

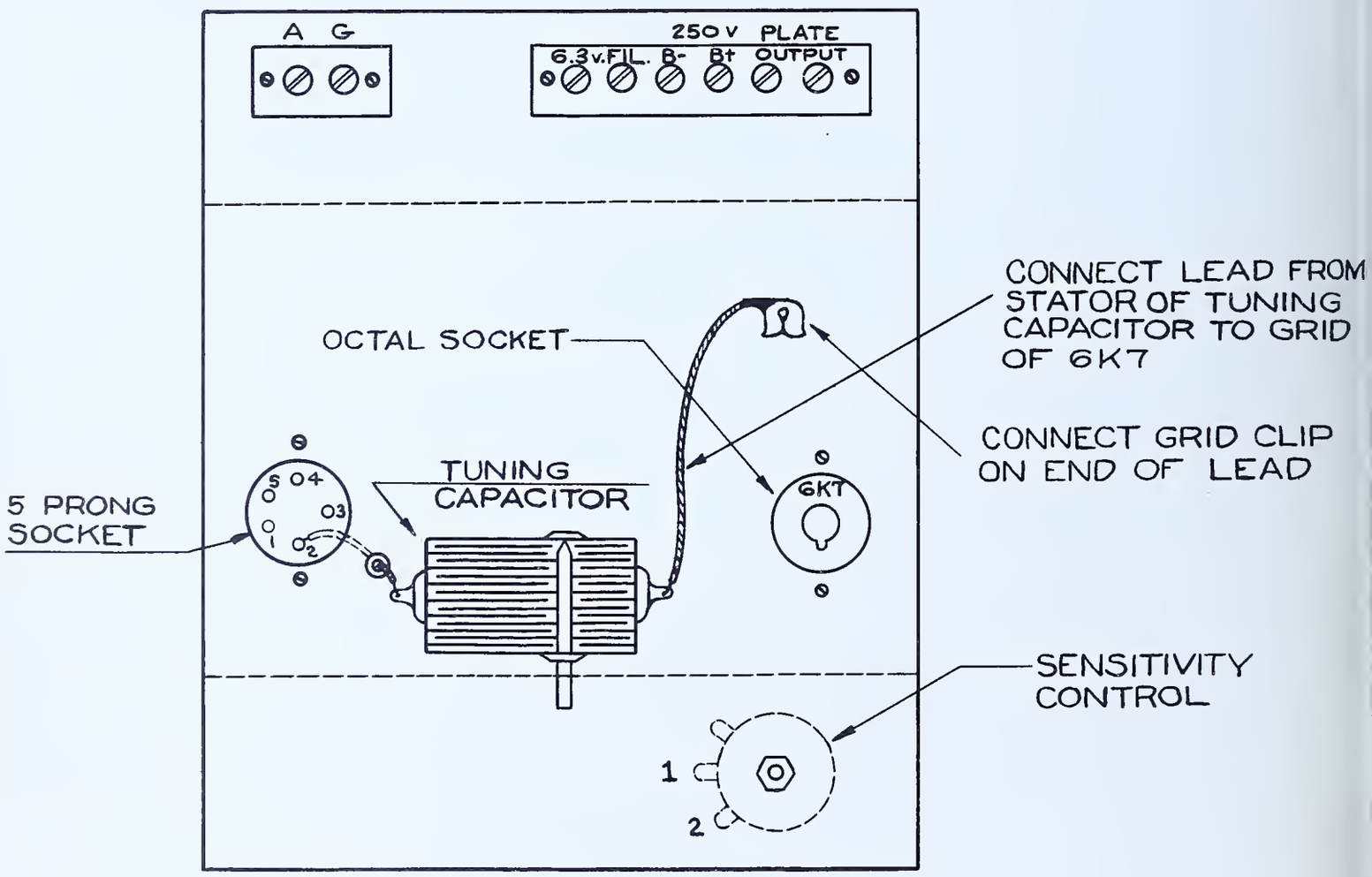

R-F AMPLIFIER
CHASSIS LAYOUT
(TOP VIEW)
FIG.-4

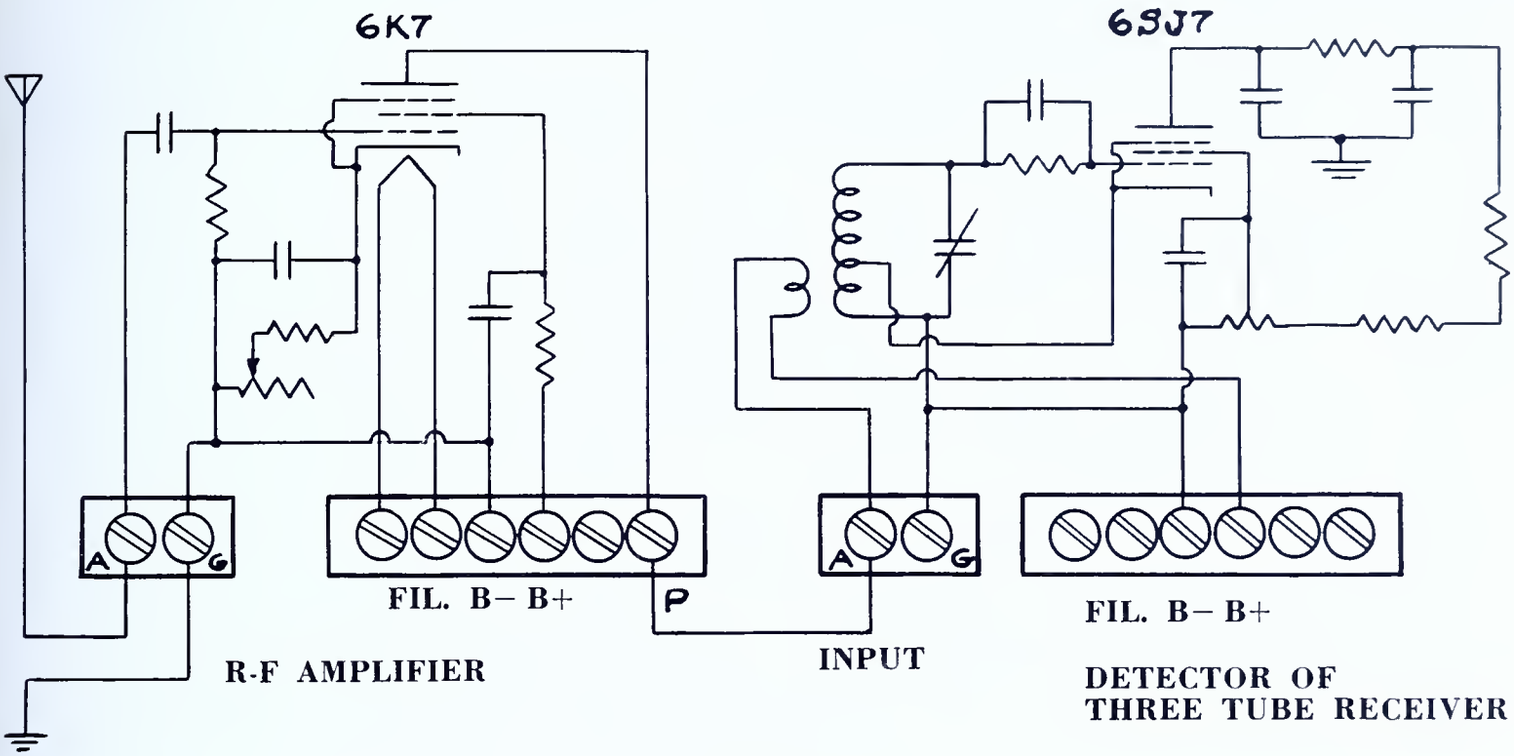

FIG. 5
Schematic diagram illustrates connection between r-f amplifier stage and three tube receiver. Both units must be connected to power supply.

Tools needed:

1. Soldering iron
2. Long nose pliers
3. Diagonal cutters
4. Screw drivers (set)
5. Socket wrenches (set)

Equipment needed:

1. Power supply
2. Three tube receiver with plug-in coil and tubes as prepared in Job 21
3. Voltmeter, 0-100-500 volts, d-c
4. Ohmmeter
5. 12 inch PM speaker

Materials needed:

1. 1- chassis - as prepared in Job 5
2. 1- octal socket
3. 1- 5 prong socket
4. 1- plug-in coil as prepared in Job 20
5. 1- .00035 mfd. tuning capacitor with proper type and number of mounting screws
6. 1- 25,000 ohm potentiometer
7. 1- 10,000 ohm resistor
8. 1- 300 ohm resistor
9. 1- 50,000 ohm resistor
10. 2- 0.1 mfd. 400 volt tubular capacitor
11. 1- 2 terminal screw type connecting strip
12. 1- 6 terminal screw type connecting strip
13. 1- 6K7 or 6K7G or 6K7GT tube
14. 8- $\frac{1}{4}$" 6-32 R.H. machine screw
15. 8- $\frac{1}{4}$" 6-32 hex nut
16. 8- lock washers for 6-32 machine screws
17. Push-back wire
18. Bell wire
19. Rosin core solder
20. 1- clip for cap of 6K7 tube
21. Tie points as needed with proper type and number of mounting screws
22. 1- dial
23. 1- knob
24. 1- .001 mfd. mica or paper capacitor

Procedure:

1. Secure tools and materials from stock room. Obtain equipment from stock room as needed.

2. Test all parts for operating conditions.

3. Make change in wiring of three tube receiver as indicated in Fig. 3. Be sure the three tube receiver is in operating condition before any changes are made. The change necessitates removing the connection between the chassis and the #5 pin on the 5 prong socket, and reconnecting the #5 pin to B+.

4. Make a wiring diagram for the untuned r-f stage using the schematic given in Fig. 1 and the chassis layout as in Fig. 4. Plug-in coil and tuning capacitor are not needed for this diagram. Base pin connections for 6K7 must be obtained from tube manual. The figures 1 and 2 next to the terminals of the sensitivity control on schematic and chassis layout drawings indicate order of connections.

5. Have instructor approve diagram.

6. Mount terminal strips, sensitivity control and octal socket on chassis as indicated by Fig. 4.

7. Wire in resistors and capacitors according to prepared wiring diagram and schematic in Fig. 1.

8. Complete remaining wiring and solder all connections. Have instructor approve work.

9. Connect three tube receiver to power supply to obtain required operating voltages.

10. Connect r-f amplifier stage to power supply for necessary voltages as indicated in Fig. 1. Receiver and r-f amplifier must both be connected to power supply.

11. Insert tubes into proper sockets of receiver and r-f amplifier. Lead to control grid (on top of 6K7) must be connected by means of clip soldered to end of lead.

12. Insert plug-in coil in receiver.

13. Connect lead from "P" of r-f amplifier to "A" of receiver. See Fig. 5.

14. Connect antenna and ground to r-f stage input terminals as indicated.

15. Connect PM speaker to output terminals of receiver.

16. Plug cord of power supply into 105-125V a-c outlet. Turn power supply switch on.

17. Operate receiver as in Job 21. Tune in station.

18. Adjust sensitivity control on r-f stage. Notice that volume increases as control is turned in clockwise direction.

19. Turn power supply switch on, tune in a station, and notice effect of varying sensitivity control on the signal strength.

20. Tune in as many stations as possible to determine whether operation is improved by using untuned r-f stage.

21. Turn power supply switch off.

22. Disconnect leads to terminal strips of r-f stage. Remove 6K7 tube from socket.

23. Mount 5 prong socket and tuning capacitor on r-f chassis.

24. Rewire unit according to schematic diagram in Fig. 2. Keep plate lead from 6K7 close to chassis and away from antenna leads.

25. Have instructor check wiring.

26. Reconnect all leads to terminal strips of r-f amplifier.

27. Insert 6K7 tube and plug-in coil in proper sockets on r-f stage and install dial on tuning capacitor.

28. Turn power supply switch on.

29. Make a voltage analysis according to tabulation form on Question Sheet. Tabulate all results on a copy of the form in notebook.

30. Tune in a station on the three tube receiver.

31. Adjust dial on r-f stage to position that gives the loudest signal.

32. Tune in several more stations. Notice that the tuning capacitors on receiver and r-f stage must be adjusted individually for each station. This is because each tuned circuit must be resonated to the frequency of the station.

33. Tune in some stations that were very weak when using untuned stage. Notice that greater volume is now available on these stations. Considerable time should be spent tuning in stations and adjusting the controls of the receiver in order to get the "feel" of operation.

34. Disassemble r-f amplifier unit and receiver. Clean all parts and return to stock room.

QUESTIONS

Place the answers to these questions in your notebook or on form as directed by instructor.

1. What is the purpose of the r-f amplifier?
2. What type tubes are usually used in r-f amplifiers?
3. Why are these tubes preferred to other types?
4. Does the untuned r-f stage amplify the desired signal more than others?
5. What is the advantage of tuning the r-f amplifier?
6. Do most r-f amplifiers employ tuned or untuned circuits?
7. What is the purpose of the .001 mfd. capacitor connected between the grid of the 6K7 and antenna?
8. What is the purpose of the 10,000 ohm resistor connected between the grid of the 6K7 and chassis?
9. To which circuit is the plate of the 6K7 tube connected?
10. What is the purpose of the 0.1 mfd. capacitor connected between cathode of the 6K7 tube and chassis?
11. What is the purpose of the 25,000 ohm variable resistor in the cathode circuit of the 6K7 tube? The 300 ohm resistor?
12. What is the purpose of the 50,000 ohm resistor in the screen grid circuit of the 6K7 tube? The 0.1 mfd. capacitor?
13. Where is the connection to the control grid of the 6K7 tube located?
14. What was the effect of tuning the r-f stage?
15. Why was it necessary to adjust each tuning capacitor when operating the tuned r-f stage and three tube receiver?
16. Define a tuned r-f receiver.
17. Are regenerative detectors always used in t-r-f radio receivers?

References:

Ghirardi, A. A., Radio Physics Course (Second Edition), pp. 516-567, 586-614.

Watson, Welsh and Eby, Understanding Radio, pp. 249-260, 316, 350-356.

The Radio Amateur's Handbook (Any Edition), A. R. R. L., Chapters on Reception of Radio Signals and Tuning and Adjusting Receivers.

The Radio Handbook (Any Edition), Editors and Engineers, Chapters on Vacuum Tube Theory and Radio Receiver Theory.

TABULATION FORM

VOLTAGE ANALYSIS - Step 29

Points measured	Volts
Cathode to chassis (sensitivity control turned on full)	
Cathode to chassis (sensitivity control turned to minimum position)	
Screen grid to chassis	
Plate to chassis	

JOB 23 — Optional

DISASSEMBLE AND REASSEMBLE A COMMERCIAL RADIO RECEIVER

This unit requires that the worker take apart a receiver in good working condition, and put it back together again to operate at least as efficiently as before. He must apply the necessary tests involved for the various parts and their operation.

DISASSEMBLE AND REASSEMBLE A COMMERCIAL RADIO RECEIVER

General Information:

If a large quantity of the same make and model receiver is in need of repairs and reconditioning, it may be advantageous to disassemble all the sets, sort good parts from bad, and reassemble the good parts into new radios of the same type. It is the aim of this job to give the trainee practice in the complete disassembly of a radio and subsequent reassembly of the parts into a working unit.

Specifications:

1. Perform a voltage analysis on receiver before disassembling. Check voltage from each tube element to chassis. Tabulate, in notebook on a sketch of each tube base, the voltage at every socket terminal.

2. Make a sketch of top view of chassis showing all parts, tubes and wiring.

3. Make a sketch of bottom view of chassis showing all parts and wiring.

4. Make an exact wiring diagram from sketches.

5. Disassemble receiver chassis.

6. Make a resistance and short check on each part of receiver after parts have been removed from chassis. Tabulate each part and corresponding resistance in notebook. See Jobs 8 and 12.

7. Reassemble receiver chassis.

8. Perform a voltage analysis on receiver after reassembly in same fashion as before disassembly. Tabulate all voltages in notebook.

Tools needed:

1. Soldering iron
2. Long nose pliers
3. Diagonal cutters
4. Screw driver (set)
5. Socket wrench (set)
6. Pick - for removing wires from terminal lugs

Equipment needed:

1. Voltmeter, 0-100, 500v, d-c
2. Voltmeter, 0-500 volts, a-c
3. Ohmmeter
4. Tube tester

Materials needed:

1. Complete receiver chassis (in working condition), tuned r-f preferred, with tubes and speaker
2. Schematic diagram as found with receiver or in a Rider Manual
3. Push-back wire
4. Rosin core solder
5. Schematic diagram of radio

Procedure:

1. Obtain tools, materials, and equipment from stock room.

2. Remove receiver chassis and speaker from cabinet if units are mounted in cabinet.

3. Check tubes of receiver.

4. Insert tubes into proper sockets in receiver.

5. Connect antenna, ground, and speaker to proper terminals of receiver.

6. Connect to proper source of power.

7. Turn radio on and tune in several stations. Secure help from instructor if necessary.

8. Make a voltage analysis of the receiver according to specifications.

9. Turn receiver off and remove all external connections to receiver.

10. Make a sketch of top and bottom views of chassis showing all parts and wiring of parts. Tubes should be removed from receiver after their position has been properly indicated on wiring diagram.

11. Check wiring of receiver against schematic diagram.

12. Prepare a wiring diagram of receiver using the sketches prepared in Step 10 and the schematic diagram. Make the wiring diagram as clear as possible since it will be necessary to re-wire the receiver according to the wiring diagram.

13. Have instructor check wiring diagram and when approved continue with Step 14.

14. Remove all wiring from receiver.

15. Remove all parts from chassis of receiver except those riveted to chassis. (See Job 12 for removal of parts.) Keep hardware together in a small box.

16. Check all parts for resistance according to specifications and tabulate results. (See Job 8 for continuity testing.)

17. Clean all parts and soldering lugs. Chassis should be thoroughly cleaned.

18. Remount parts on chassis in original positions, use screws to remount riveted parts. Have instructor check mounting.

19. Rewire parts according to prepared wiring diagram and schematic diagram. If old wire is in poor condition use new wire.

20. Check wiring against schematic diagram.

21. Have instructor check wiring.

22. Insert tubes into correct sockets.

23. Connect antenna, ground and speaker to chassis at proper terminals.

24. Insert receiver line cord plug into 105-125 volt a-c outlet.

25. Turn receiver on.

26. Make a voltage analysis as indicated by specifications.

27. Compare voltages obtained in Steps 8 and 26.

    Note: If voltages in Step 26 do not agree with measurements made in Step 8, consult instructor and have him help find causes of difference.

28. Operate receiver. Have instructor adjust trimmers of receiver for maximum sensitivity and then determine whether operation is as good as before disassembly.

29. Return tools, materials, and equipment to stock room.

APPENDIX,

GLOSSARY

AND

ABBREVIATIONS

RMA RESISTOR COLOR CODE

I

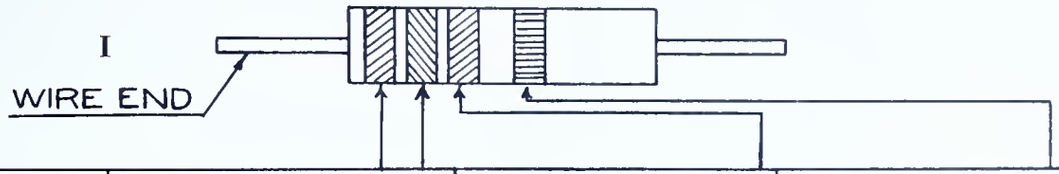

Color of Dot	Significant Figure: Body Color and Tip, or 1st and 2nd stripe	Decimal Multiplier value of Dot or third stripe	% Tolerance 4th stripe or diagonal tip
Black	0	1	
Brown	1	10	
Red	2	100	
Orange	3	1,000	
Yellow	4	10,000	
Green	5	100,000	
Blue	6	1,000,000	
Violet	7	10,000,000	
Gray	8	100,000,000	
White	9	1,000,000,000	
Gold	-	.1	5%
Silver	-	.01	10%
No color	-	-	20%

II

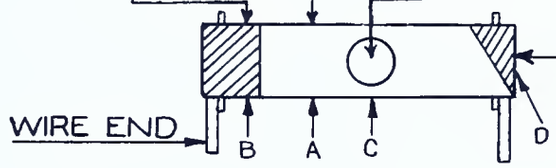

In units marked as in illustration (I) at the top of the page, the first two stripes are the first two significant figures in that order. These two figures are multiplied by the multiplier indicated by the third stripe to secure the resistance in ohms.

A resistor will vary above and below its rated resistance value. This variation is expressed as a percentage tolerance. The color of the fourth stripe indicates this percentage. If this fourth color stripe is missing, unless the percentage tolerance is stamped on the resistor, a 20% tolerance is indicated.

Example:

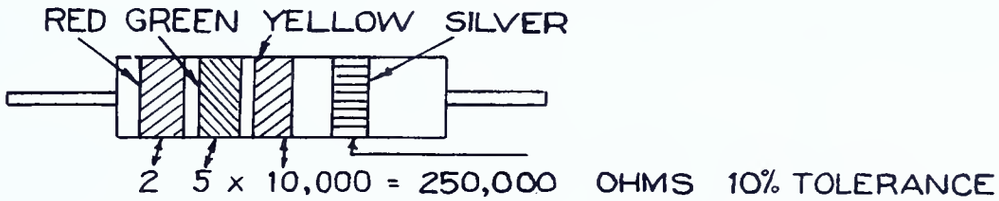

In units marked as in the illustration (II), below the table, the body color (A), and the tip color (B), are the first two significant figures in that order multiplied by the multiplier indicated by the dot color (C) to secure the resistance in ohms. The diagonal color tip indicates percentage tolerance. The absence of color indicates 20% tolerance.

Example:

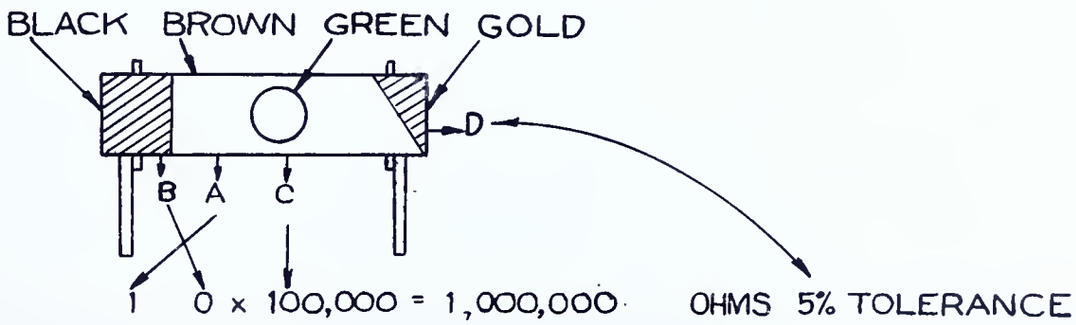

MICA CAPACITOR COLOR CODE

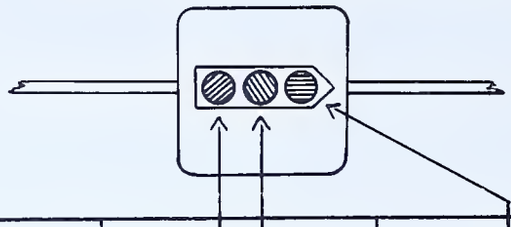

Color of Dot	Voltage Rating	Significant Figure of Dot	Decimal Multiplier	% Tolerance
Black	-	0	1	-
Brown	100	1	10	1%
Red	200	2	100	2%
Orange	300	3	1,000	3%
Yellow	400	4	10,000	4%
Green	500	5	100,000	5%
Blue	600	6	1,000,000	6%
Violet	700	7	10,000,000	7%
Gray	800	8	100,000,000	8%
White	900	9	1,000,000,000	9%
Gold	1,000	-	.1	5%
Silver	2,000	-	.01	10%
No Color	500	-	-	20%

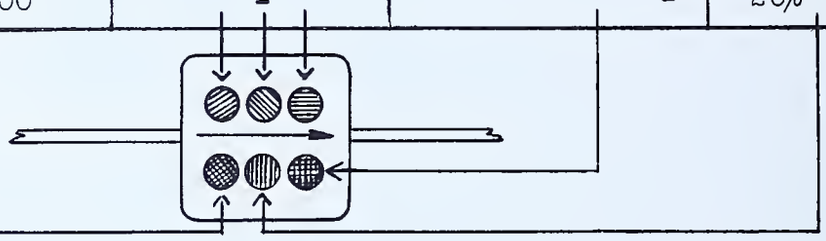

On units marked with three dots, the first two are the significant figures of capacity in mmfd. (micro-microfarad). These two figures are multiplied by the multiplier indicated by the third dot. Voltage rating is stamped into the bakelite.

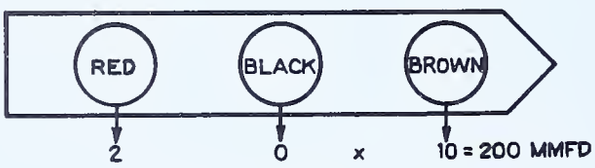

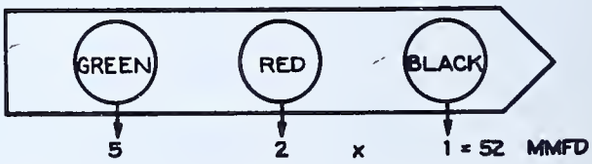

On units marked with six dots the upper three dots are significant figures of capacity in mmfd. These are multiplied by the multiplier indicated by the lower right hand dot. The other two dots are the tolerance and voltage rating.

Example:

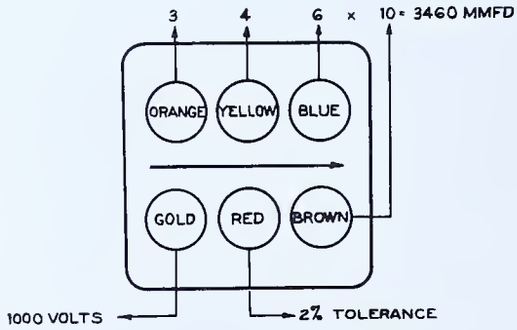

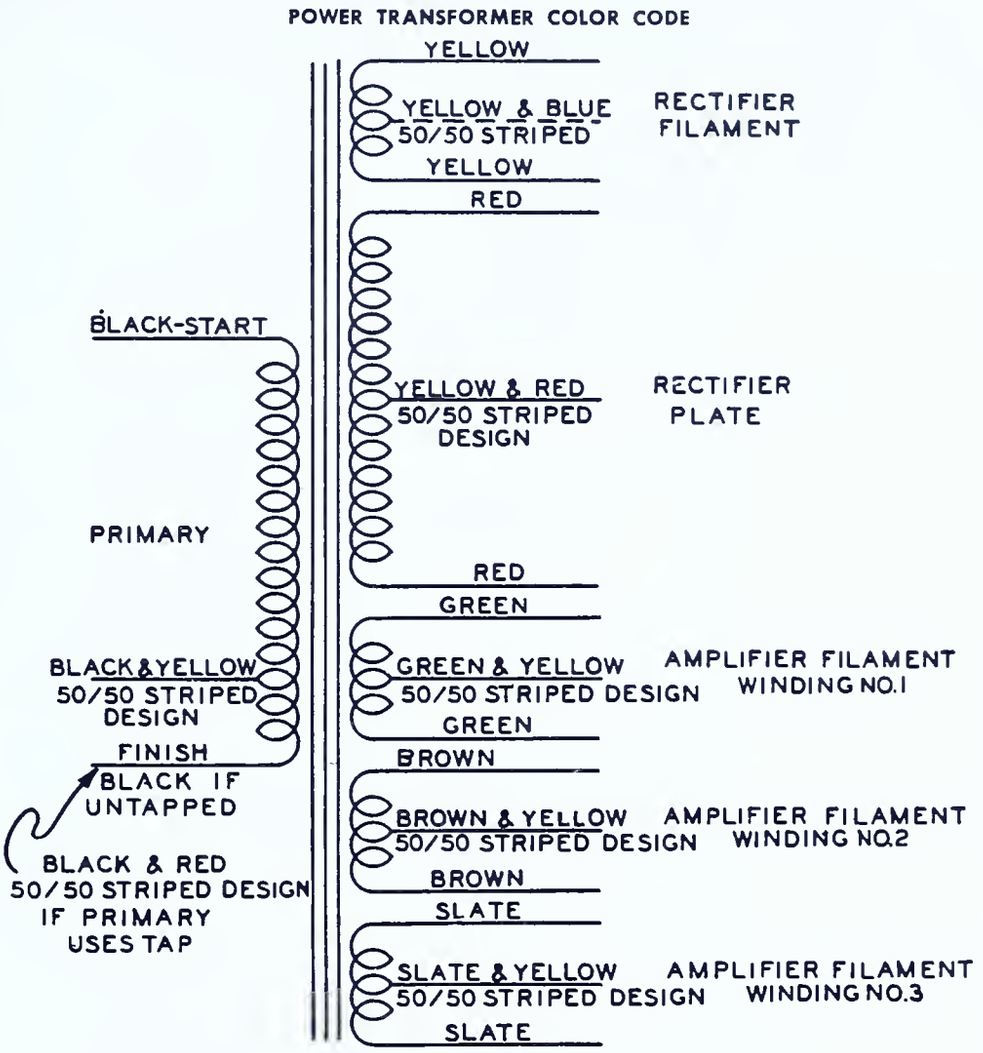

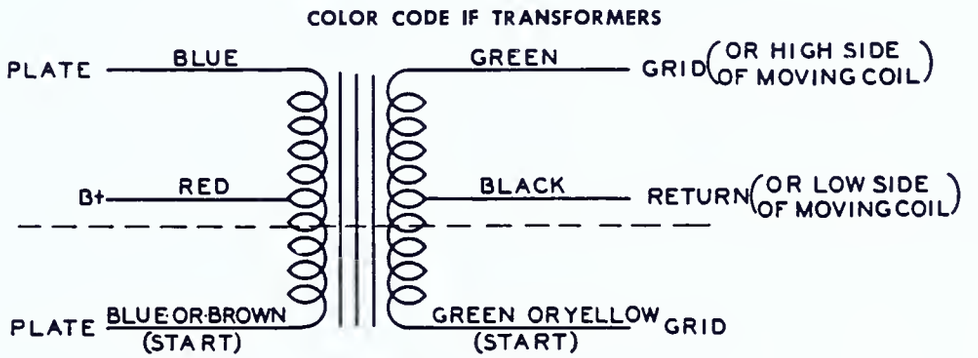

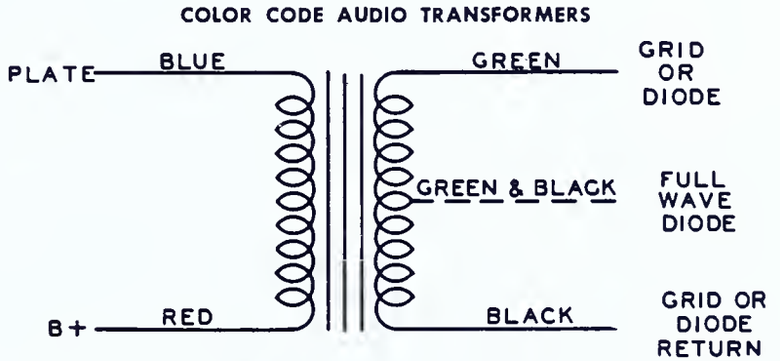

The upper portion (that code above the dotted line) for single primary and/or secondary transformers.

MACHINE SCREW CLEARANCE AND TAP SIZES

SIZE OF SCREW	NUMBER OF THREADS	DIAMETER OF SCREW	TAP HOLES		CLEARANCE HOLES	
			SIZE OF TAP DRILL	SIZE IN DECIMAL	CLEARANCE DRILL OR BODY DRILL	SIZE IN DECIMAL
2	56	.086	50	.070	42	.093
2	64	.086	50	.070	42	.093
3	48	.099 x	47	.0785	37	.104
3	56	.099	45	.082	37	.104
4	36	.112 x	44	.086	31	.120
4	40	.112 x	43	.089	31	.120
4	48	.112	42	.0935	31	.120
5	40	.125 x	38	.1015	29	.136
5	44	.125	37	.104	29	.136
6	32	.138 x	36	.110	27	.144
6	40	.138	33	.113	27	.144
8	32	.164 x	29	.136	18	.169
8	36	.164	29	.136	18	.169
10	24	.190 x	25	.1495	9	.196
10	32	.190 x	21	.159	9	.196
12	24	.216	16	.177	2	.221
12	28	.216 x	14	.182	2	.221
14	20	.242	10	.1935	1/4	.250
14	24	.242	7	.201	1/4	.250
1/4	20	.250 x	7	.201	17/64	.266
1/4	28	.250 x	3	.213	17/64	.266
5/16	18	.3125	* F / 17/64	.257 / .2656	21/64	.328
5/16	24	.3125	* I / 9/32	.272 / .2812	21/64	.328
3/8	16	.375	5/16	.3125	25/64	.3906
3/8	24	.375	* Q / 21/64	.332 / .3281	25/64	.3906
7/16	14	.4375	* U / 3/8	.368 / .375	29/64	.4531
7/16	20	.4375	25/64	.3906	29/64	.4531
1/2	13	.5000	27/64	.4218	33/64	.5156
1/2	20	.5000	29/64	.4531	33/64	.5156

x Sizes regularly used in radio work

* Preferred size if available

SIZES OF DRILLS

Three systems of size classifications are used for metal drills. The size is usually marked on the shank of all but the very small drills. Where the marking is not readable a drill gauge or micrometer should be used to determine the size.

(1) Number Size

The most commonly used designation for the smaller drills is by numbers from #1 to #80. Chart follows. Note that the larger the drill number the smaller is the drill.

DRILL SIZE-DECIMAL EQUIVALENTS
NUMBERED DRILLS

Drill No.	Diam. In.	Drill No.	Diam. In.	Drill No.	Diam. In.
1	.2280	28	.1405	55	.0520
2	.2210	29	.1360	56	.0465
3	.2130	30	.1285	57	.0430
4	.2090	31	.1200	58	.0420
5	.2055	32	.1160	59	.0410
6	.2040	33	.1130	60	.0400
7	.2010	34	.1110	61	.0390
8	.1990	35	.1100	62	.0380
9	.1960	36	.1065	63	.0370
10	.1935	37	.1040	64	.0360
11	.1910	38	.1015	65	.0350
12	.1890	39	.0995	66	.0330
13	.1850	40	.0980	67	.0320
14	.1820	41	.0960	68	.0310
15	.1800	42	.0935	69	.0292
16	.1770	43	.0890	70	.0280
17	.1730	44	.0860	71	.0260
18	.1695	45	.0820	72	.0250
19	.1660	46	.0810	73	.0240
20	.1610	47	.0785	74	.0225
21	.1590	48	.0760	75	.0210
22	.1570	49	.0730	76	.0200
23	.1540	50	.0700	77	.0180
24	.1520	51	.0670	78	.0160
25	.1495	52	.0635	79	.0145
26	.1470	53	.0595	80	.0135
27	.1440	54	.0550		

(2) Letter Sizes

DRILL SIZE-DECIMAL EQUIVALENTS
LETTERED DRILLS

No. Drill	In. Diam.	No. Drill	In. Diam.	No. Drill	In. Diam.
A	.234	J	.277	S	.348
B	.238	K	.281	T	.358
C	.242	L	.290	U	.368
D	.246	M	.295	V	.377
E	.250	N	.302	W	.386
F	.257	O	.316	X	.397
G	.261	P	.323	Y	.404
H	.266	Q	.332	Z	.413
I	.272	R	.339		

(3) Fractional Designations

Range by 1/64ths, from 1/32 of an inch to 1 inch.

Copper Wire Table

Gauge No. B. & S.	Diam. in Mils[1]	Circular Mil Area	Turns per Linear Inch[2]				Turns per Square Inch[2]			Feet per Lb.		Ohms per 1000 ft. 25° C.	Correct Capacity at 1500 C.M. per Amp.[3]	Diam. in mm.
			Enamel	S.S.C.	D.S.C. or S.C.C.	D.C.C.	S.C.C.	Enamel	D.C.C.	Bare	D.C.C.			
1	289.3	82690	—	—	—	—	—	—	—	3.947	—	.1264	55.7	7.348
2	257.6	66370	—	—	—	—	—	—	—	4.977	—	.1593	44.1	6.544
3	229.4	52640	—	—	—	—	—	—	—	6.276	—	.2009	35.0	5.827
4	204.3	41740	—	—	—	—	—	—	—	7.914	—	.2533	27.7	5.189
5	181.9	33100	—	—	—	—	—	—	—	9.980	—	.3195	22.0	4.621
6	162.0	26250	—	—	—	—	—	—	—	12.58	—	.4028	17.5	4.115
7	144.3	20820	—	—	—	—	—	—	—	15.87	—	.5080	13.8	3.665
8	128.5	16510	7.6	—	7.4	7.1	—	—	—	20.01	19.6	.6405	11.0	3.264
9	114.4	13090	8.6	—	8.2	7.8	—	—	—	25.23	24.6	.8077	8.7	2.906
10	101.9	10380	9.6	—	9.3	8.9	87.5	84.8	80.0	31.82	30.9	1.018	6.9	2.588
11	90.74	8234	10.7	—	10.3	9.8	110	105	97.5	40.12	38.8	1.284	5.5	2.305
12	80.81	6530	12.0	—	11.5	10.9	136	131	121	50.59	48.9	1.619	4.4	2.053
13	71.96	5178	13.5	—	12.8	12.0	170	162	150	63.80	61.5	2.042	3.5	1.828
14	64.08	4107	15.0	—	14.2	13.8	211	198	183	80.44	77.3	2.575	2.7	1.628
15	57.07	3257	16.8	—	15.8	14.7	262	250	223	101.4	97.3	3.247	2.2	1.450
16	50.82	2583	18.9	18.9	17.9	16.4	321	306	271	127.9	119	4.094	1.7	1.291
17	45.26	2048	21.2	21.2	19.9	18.1	397	372	329	161.3	150	5.163	1.3	1.150
18	40.30	1624	23.6	23.6	22.0	19.8	493	454	399	203.4	188	6.510	1.1	1.024
19	35.89	1288	26.4	26.4	24.4	21.8	592	553	479	256.5	237	8.210	.86	.9116
20	31.96	1022	29.4	29.4	27.0	23.8	775	725	625	323.4	298	10.35	.68	.8118
21	28.46	810.1	33.1	32.7	29.8	26.0	940	895	754	407.8	370	13.05	.54	.7230
22	25.35	642.4	37.0	36.5	34.1	30.0	1150	1070	910	514.2	461	16.46	.43	.6438
23	22.57	509.5	41.3	40.6	37.6	31.6	1400	1300	1080	648.4	584	20.76	.34	.5733
24	20.10	404.0	46.3	45.3	41.5	35.6	1700	1570	1260	817.7	745	26.17	.27	.5106
25	17.90	320.4	51.7	50.4	45.6	38.6	2060	1910	1510	1031	903	33.00	.21	.4547
26	15.94	254.1	58.0	55.6	50.2	41.8	2500	2300	1750	1300	1118	41.62	.17	.4049
27	14.20	201.5	64.9	61.5	55.0	45.0	3030	2780	2020	1639	1422	52.48	.13	.3606
28	12.64	159.8	72.7	68.6	60.2	48.5	3670	3350	2310	2067	1759	66.17	.11	.3211
29	11.26	126.7	81.6	74.8	65.4	51.8	4300	3900	2700	2607	2207	83.44	.084	.2859
30	10.03	100.5	90.5	83.3	71.5	55.5	5040	4660	3020	3287	2534	105.2	.067	.2546
31	8.928	79.70	101.	92.0	77.5	59.2	5920	5280	—	4145	2768	132.7	.053	.2268
32	7.950	63.21	113.	101.	83.6	62.6	7060	6250	—	5227	3137	167.3	.042	.2019
33	7.080	50.13	127.	110.	90.3	66.3	8120	7360	—	6591	4697	211.0	.033	.1798
34	6.305	39.75	143.	120.	97.0	70.0	9600	8310	—	8310	6168	266.0	.026	.1601
35	5.615	31.52	158.	132.	104.	73.5	10900	8700	—	10480	6737	335.0	.021	.1426
36	5.000	25.00	175.	143.	111.	77.0	12200	10700	—	13210	7877	423.0	.017	.1270
37	4.453	19.83	198.	154.	118.	80.3	—	—	—	16660	9309	533.4	.013	.1131
38	3.965	15.72	224.	166.	126.	83.6	—	—	—	21010	10666	672.6	.010	.1007
39	3.531	12.47	248.	181.	133.	86.6	—	—	—	26500	11907	848.1	.008	.0897
40	3.145	9.88	282.	194.	140.	89.7	—	—	—	33410	14222	1069	.006	.0799

[1]A mil is 1/1000 (one thousandth) of an inch.
[2]The figures given are approximate only, since the thickness of the insulation varies with different manufacturers.
[3]The current-carrying capacity at 1000 C.M. per ampere is equal to the circular-mil area (Column 3) divided by 1000.

AMMETER

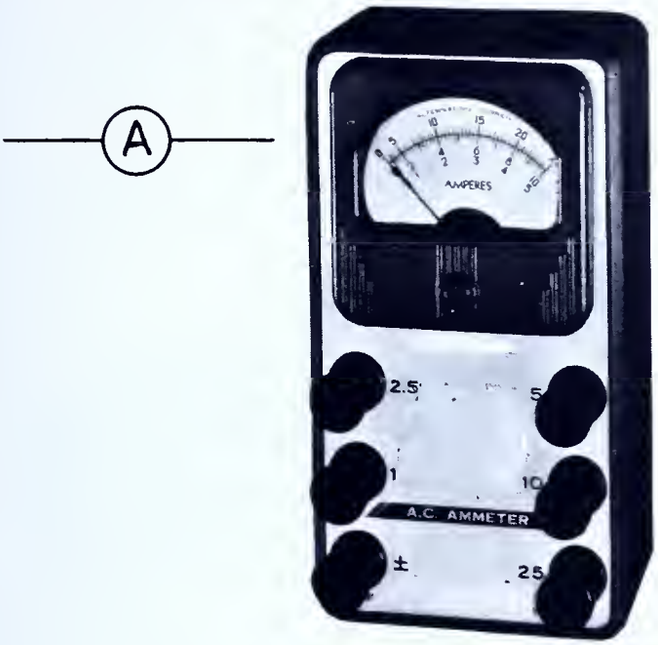

An instrument used for measuring the current flow, in amperes, through a circuit.

BATTERY

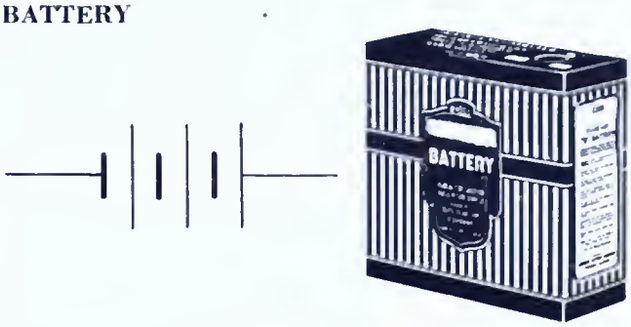

Two or more cells connected together to serve as a d-c voltage source.

BUZZER

A buzzer is a device in which an armature is vibrated by interrupted electro-magnetic means, producing a buzzing sound.

ANTENNA OR AERIAL

A metallic structure, or an arrangement of conducting wires or rods, used for picking up, or radiating, radio waves.

CABLING (Lacing or Cabling)

The process of lacing a group of wires to hold them together.

CAPACITOR

A device whose function is to introduce capacitance in a circuit, consisting of any two conductors separated by a dielectric.

ANTENNA, LOOP

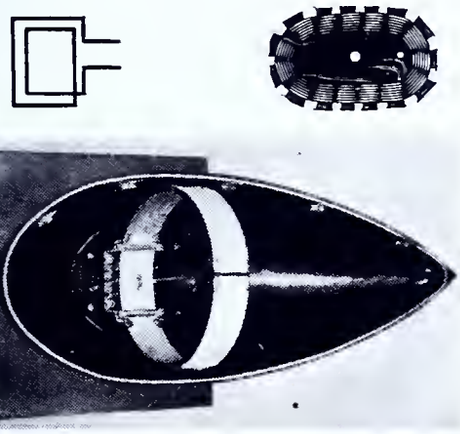

A coil of wire usually wound on a large form, and designed to operate with a receiver or transmitter, to pick up or transmit radio waves.

CAPACITOR, ADJUSTABLE PADDER OR TRIMMER

A capacitor constructed so that its value of capacity may be varied, usually by adjusting a nut or screw.

CAPACITOR, ELECTROLYTIC

A fixed capacitor whose dielectric depends on chemical action.

CAPACITOR, FIXED

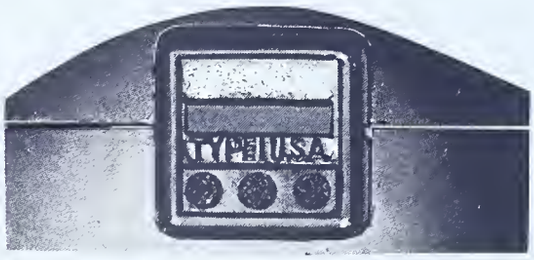

A capacitor whose capacitance can not be varied.

CAPACITOR, FIXED, SHIELDED

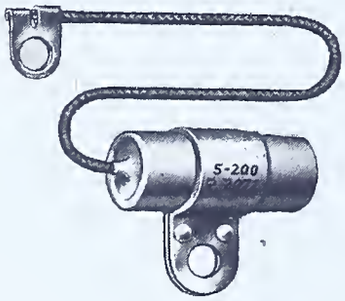

A fixed capacitor mounted in a metal case acting as a shield, to prevent the magnetic or electrostatic fields of the capacitor from affecting, or being affected by other magnetic or electrostatic fields.

CAPACITOR, GANGED

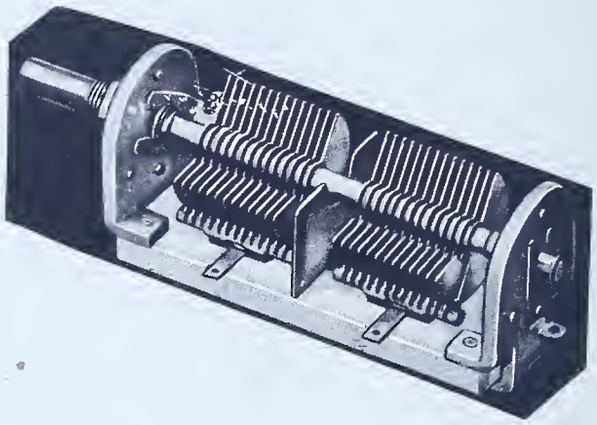

Two or more variable capacitors whose rotors are mechanically linked so that the capacities may be varied simultaneously by the motion of a single control.

CAPACITOR, VARIABLE

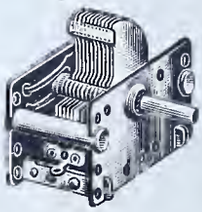

A capacitor constructed so that its capacity may be varied by mechanical means.

CAPACITOR, VARIABLE SHIELDED

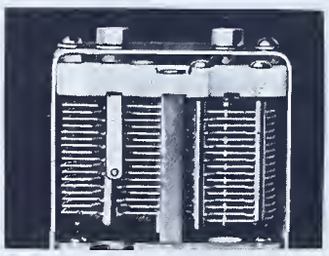

A variable capacitor mounted in a metal case acting as a shield to prevent the magnetic or electrostatic fields of the capacitor from affecting or being affected by other magnetic or electrostatic fields.

CAPACITY, DISTRIBUTED

The capacity between circuit elements other than that provided by the capacitors in the circuit.

CELL, BIAS

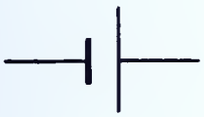

A 1 or 1¼ volt cell used singly or in series to provide a negative C bias voltage for a vacuum tube circuit, where practically no grid current is drawn.

CELL, DRY

A combination of electrodes and electrolyte which converts chemical energy into electrical energy.

CHOKE, A-F OR FILTER

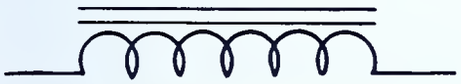

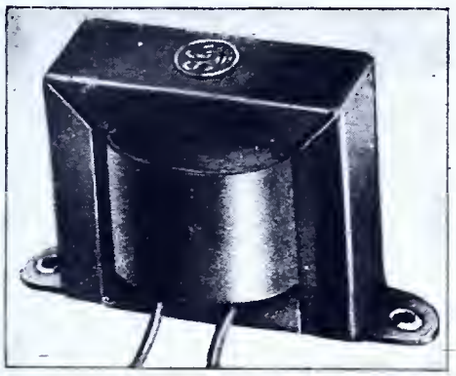

An inductance unit, consisting of a coil of wire wound on a laminated iron core, whose function is to retard changes in current flow at audio frequencies.

CHOKE, R-F AND AIR CORE

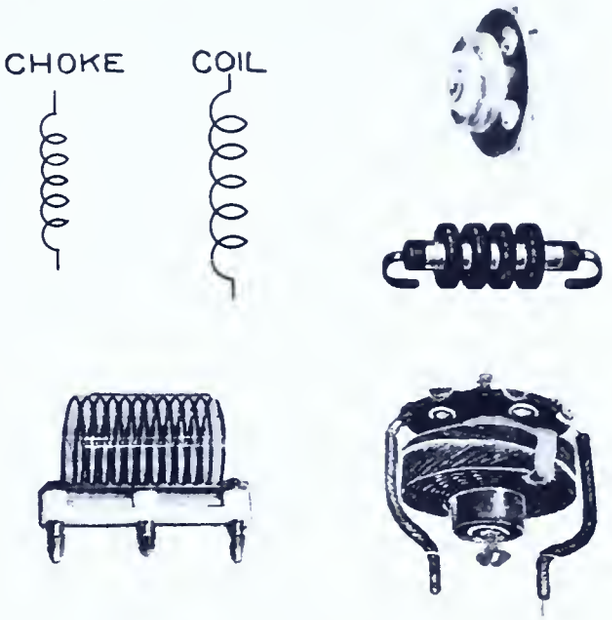

An air core inductance designed to supress certain radio frequency current.

COIL, VARIABLE CONTACT

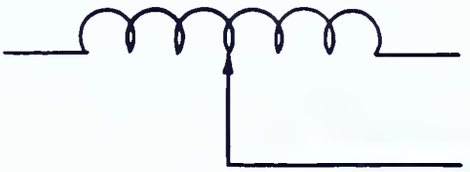

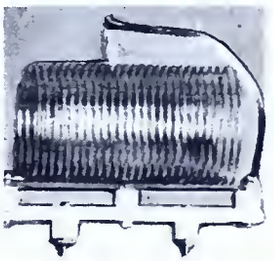

A coil employing a contact which slides across the winding of the coil, making a contact possible with any turn of the winding.

COIL, VARIABLE, TAPPED

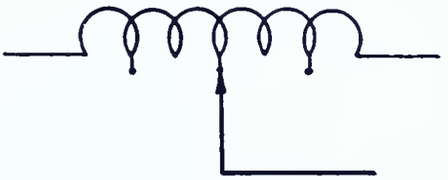

A coil which has connections at different turns of the winding so different values of inductance may be obtained.

CONDENSER (See CAPACITOR)

COUPLING, LINK

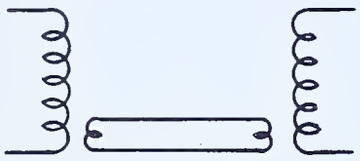

A means by which r-f power is transferred from one radio circuit to another, consisting of two coils connected by a pair of wires.

CROSSED WIRES, CONNECTED

CROSSED WIRES, NOT CONNECTED

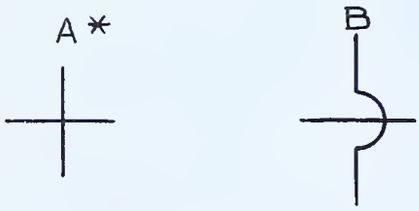

*When these two symbols are used in the same circuit diagram, symbol "A" designates "CROSSED WIRES, CONNECTED".

CRYSTAL DETECTOR

A rectifying device utilizing a mineral such as silicon or galena which permits current to flow principally in one direction.

CRYSTAL PIEZO-ELECTRIC PLATE

A plate or bar made of Rochelle salts or quartz which will generate electrical impulses between two of its surfaces when mechanically vibrated or vice versa.

ELECTRIC EYE (Tuning)

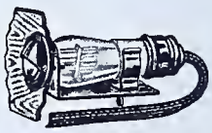

A popular expression for an electron ray tuning indicator tube, used in some radio circuits. The eye consists of a fluorescent screen with a dark sector whose size varies inversely in proportion to the strength of the incoming signal.

FREQUENCY METER

A device which measures the frequency of an alternating current.

FUSE

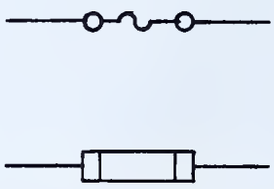

A circuit protecting device which makes use of a substance which has a low melting point.

GENERATOR

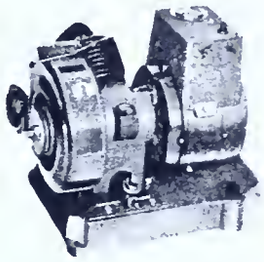

A rotating machine which converts mechanical energy into electrical energy.

GLOW LAMP

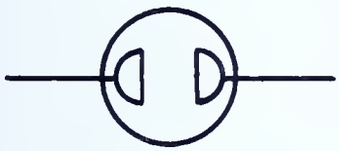

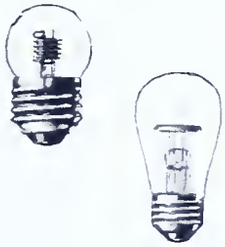

A glass envelope filled with a gas which becomes luminous when ionized.

GROUND

(1) Connection to the earth (a conductor), as one way to complete the antenna circuit.
(2) The chassis, as a return of the various circuits of a radio set.

INDUCTOR

A coil of wire used in an electrical circuit to supply inductance.

JACK, CLOSED CIRCUIT

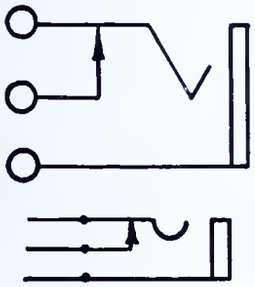

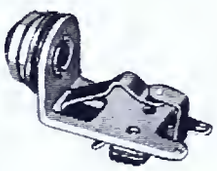

A receptacle which has its contacts constructed so that the circuit is closed when the plug is removed.

JACK, OPEN CIRCUIT

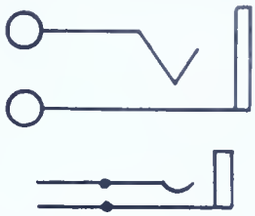

A receptacle which has its contacts constructed so that they do not close the circuit when the plug is removed.

KEY, TELEGRAPH

A lever-type switch designed for rapid opening and closing of a circuit.

LOUD-SPEAKER, MOVING COIL, ELECTRO-DYNAMIC

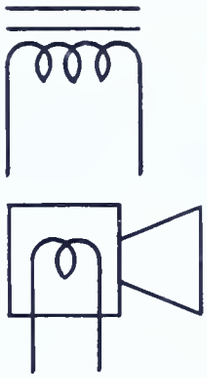

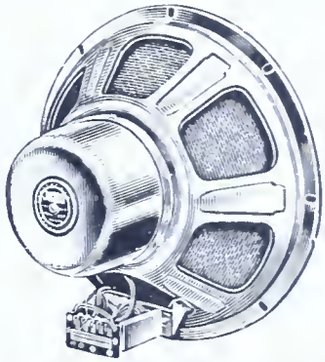

A device which converts electrical impulses within the audio frequency range to sound waves. It consists of an electro-magnetic field in which a movable voice coil is supported.

LOUD SPEAKER, PERMANENT MAGNET, (PM)

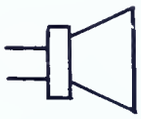

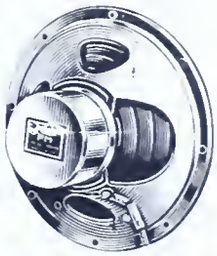

A device which converts electrical impulses within the audio frequency range to sound waves, it consists of a permanent magnetic field in which a movable voice coil is supported.

LOUD-SPEAKER, PERMANENT MAGNET, BALANCED ARMATURE

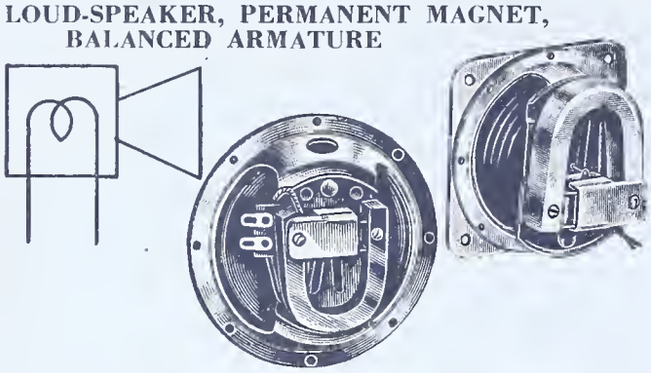

MICROPHONE, CAPACITOR TYPE

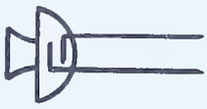

A device in which sound waves produce changes in capacity resulting in varying electrical impulses.

MICROPHONE, CARBON TYPE, DOUBLE BUTTON

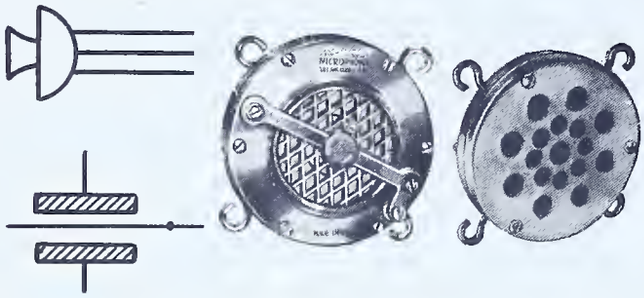

A device in which the pressure produced by sound waves changes the total resistance of cups of carbon granules on either side of a diaphragm, resulting in varying electrical impulses.

MICROPHONE, CARBON TYPE, SINGLE BUTTON

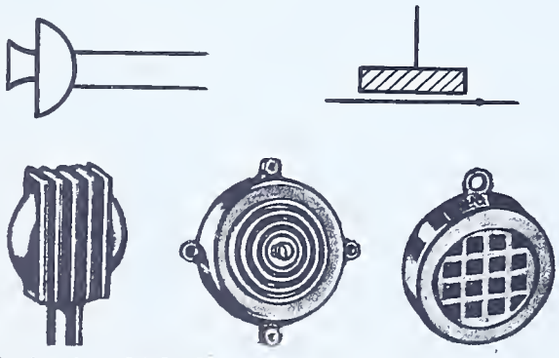

A device in which the pressure produced by sound waves changes the total resistance of a cup of carbon granules on one side of a diaphragm, resulting in varying electrical impulses.

MICROPHONE, CRYSTAL TYPE

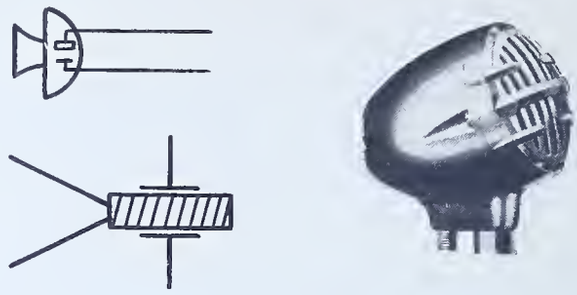

A device equipped with a piezo-electric crystal which converts sound waves into varying electrical impulses.

MICROPHONE, MOVING COIL, DYNAMIC

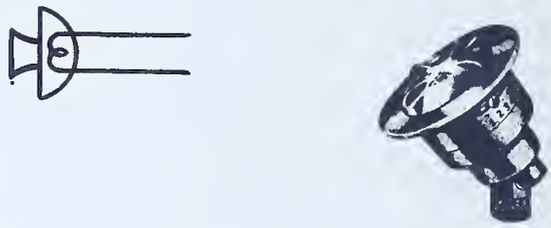

A device in which a diaphragm, actuated by sound waves, moves a coil back and forth in a magnetic field to produce varying electrical impulses.

MILLIAMMETER

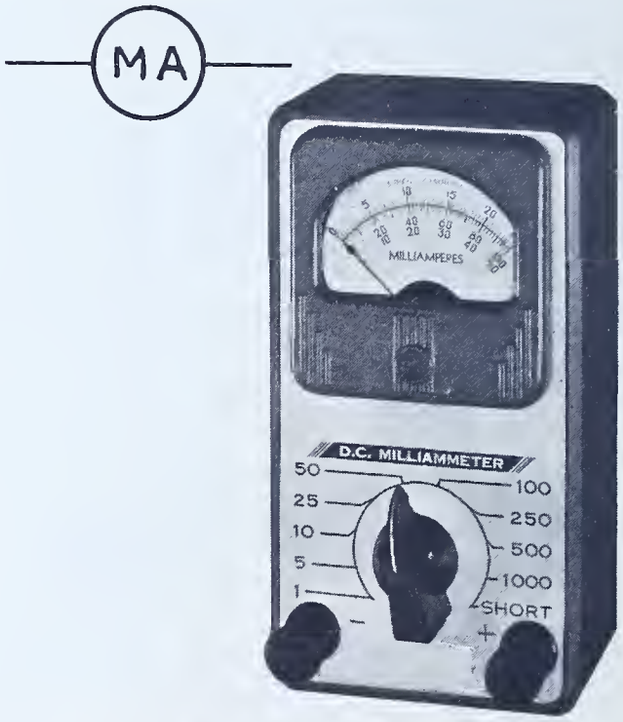

An instrument used for measuring the current flow in milliamperes through a circuit.

MOTOR

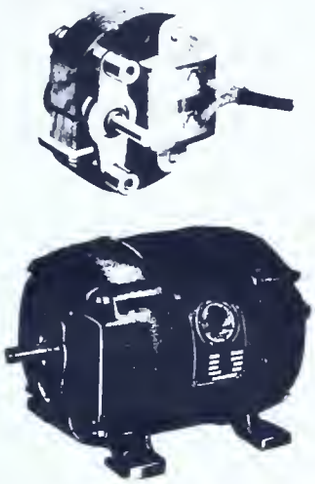

A machine which converts electrical energy into mechanical energy.

NEON LAMP

A glow lamp filled with neon gas.

PHOTOELECTRIC CELL

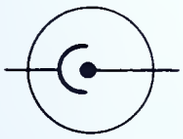

A device which converts variations in light intensity into varying electrical impulses.

PICK-UP, CRYSTAL PHONOGRAPH

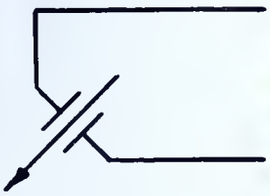

A device employing a piezo-electric crystal to convert mechanical vibrations to electrical impulses.

PICK-UP, ELECTROMAGNETIC PHONOGRAPH

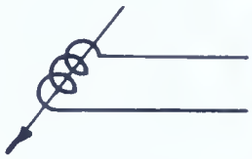

A device employing a coil and a magnet to convert mechanical vibrations to electrical impulses.

PILOT LAMP

A small indicating or illuminating electric light.

PLUG

A connecting device at the end of a flexible cord, used for making a readily removable connection to a corresponding receptacle, terminal jack or outlet.

POTENTIOMETER

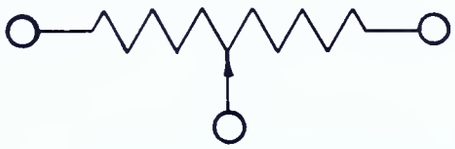

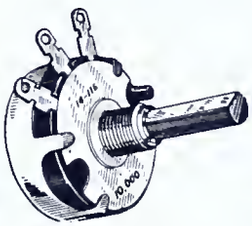

Volume control without switch

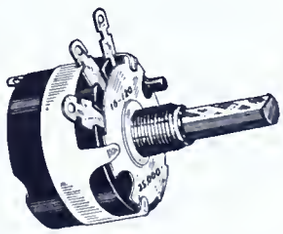

Volume control with switch

A resistance with terminals at each end, and a movable contact arm, which can be set at any desired point of the resistance element.

RECEIVER, HEADPHONES

A device used to convert electrical impulses to sound waves.

RECEPTACLE

A device into which a plug is inserted for the purpose of making electrical connections.

RECORDING CUTTER, ELECTROMAGNETIC

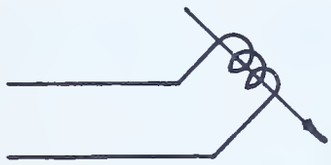

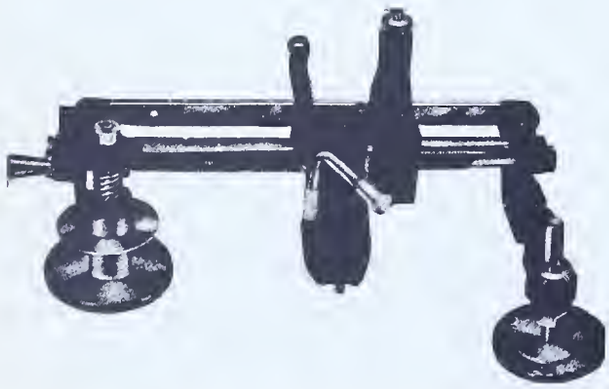

A device employing a coil and magnet to change electrical impulses to mechanical vibrations, actuating a cutting device which makes a groove of varying width or depth on a revolving disc or cylinder.

RECTIFIER, COPPER OXIDE, FULL WAVE

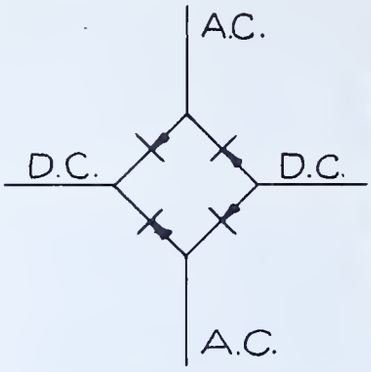

A unit designed to convert both halves of a cycle of alternating current to pulsating direct current.

RECTIFIER, COPPER OXIDE, HALF WAVE

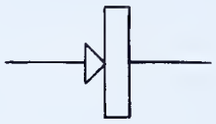

A unit designed to convert one half of each cycle of alternating current to pulsating direct current.

RELAY, KEYING

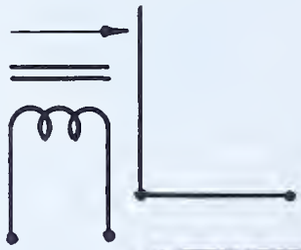

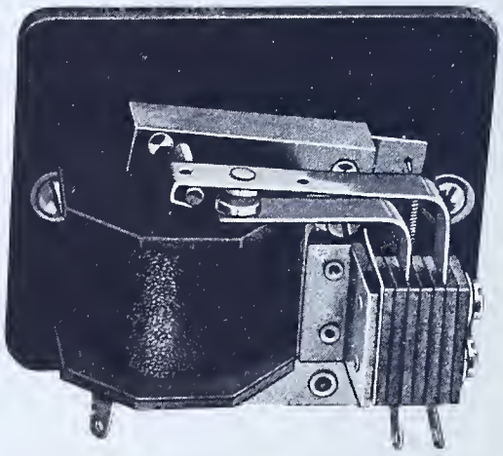

An electromagnetic device which makes and breaks a circuit as a voltage is impressed on the coil of the relay.

RELAY, SWITCHING

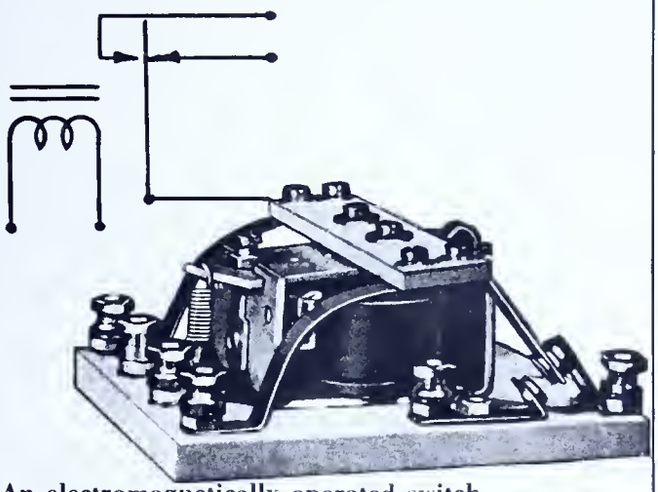

An electromagnetically operated switch.

RELAY, TIME DELAY

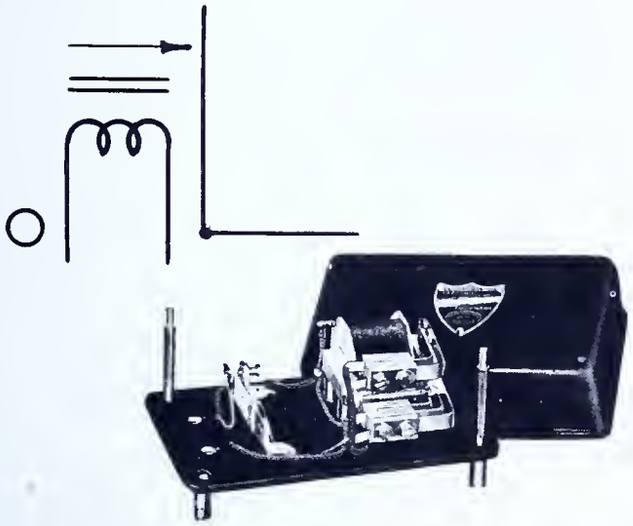

An electromagnetic switch which operates at some predetermined time after the voltage has been impressed on the coil of the relay.

RESISTOR, ADJUSTABLE OR VARIABLE

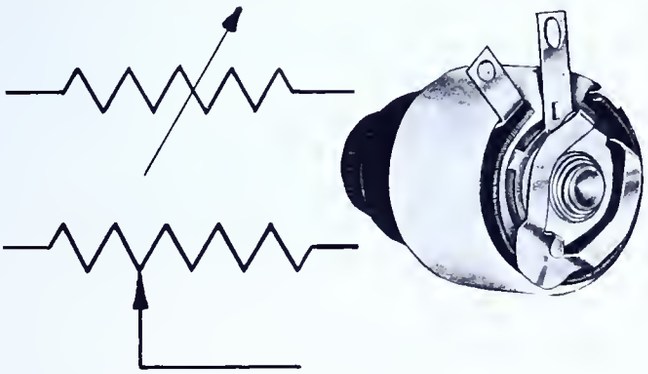

A resistor whose value may be varied.

RESISTOR, FIXED

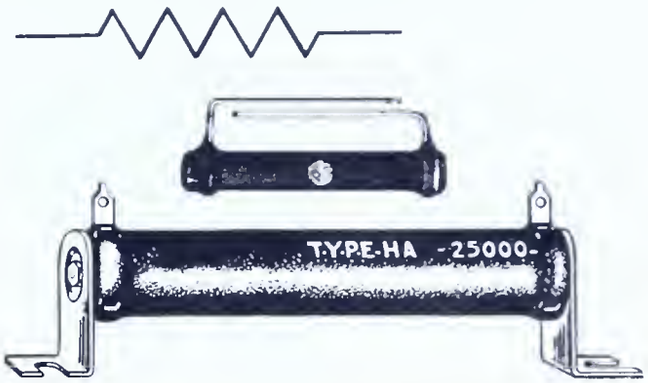

A device which offers a definite opposition to the flow of electric current in a circuit.

RESISTOR, VARIABLE TAPS

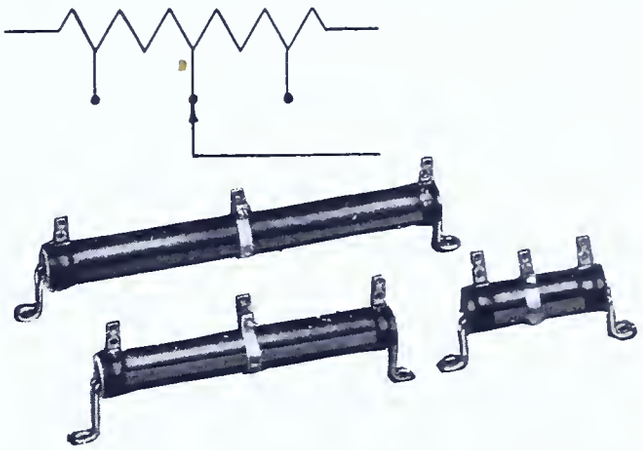

A resistor with contacts which may be shifted to different positions on the element of the resistor.

RHEOSTAT

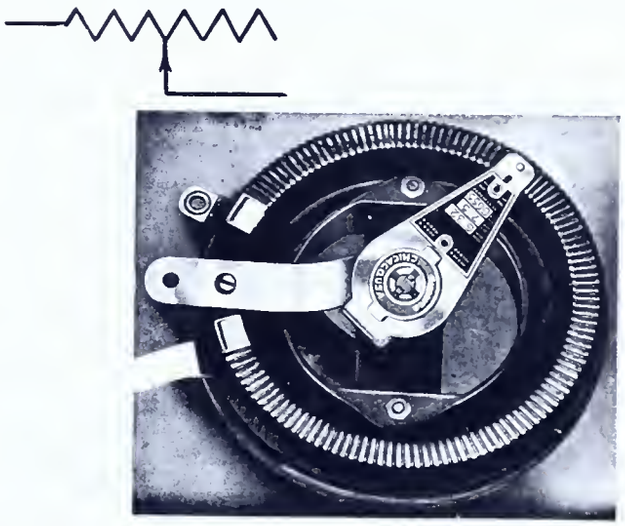

A variable resistance unit.

SHIELDING

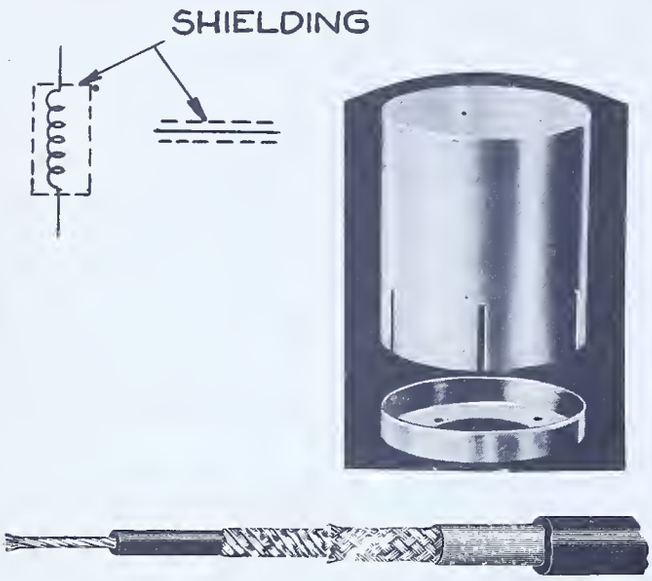

A metal can or housing used to prevent electrostatic magnetic fields from affecting, or being affected by, other such fields.

SPEAKER. (See LOUD-SPEAKER)

SWITCH, DOUBLE POLE, DOUBLE THROW

A switch by which two connections may be made at the same time in either of two circuits.

SWITCH, DOUBLE POLE, SINGLE THROW

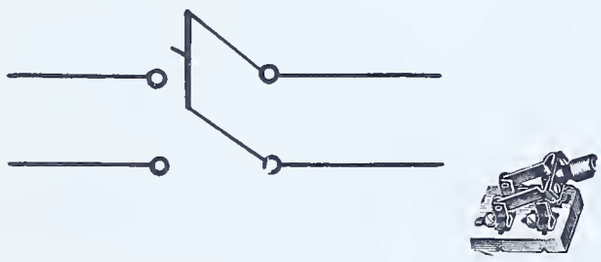

A switch by which two connections may be made in a circuit at the same time.

SWITCH, MULTI-POINT OR SELECTOR

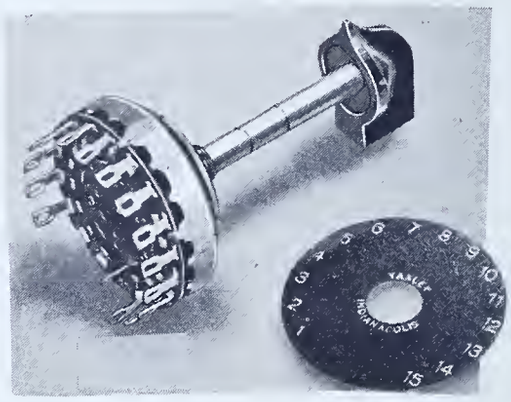

A switch which may be rotated to make connections to a number of different circuits in various combinations at the same time.

SWITCH, PUSH BUTTON

A switch changing a circuit when it is pushed.

SWITCH, PUSH BUTTON BAND

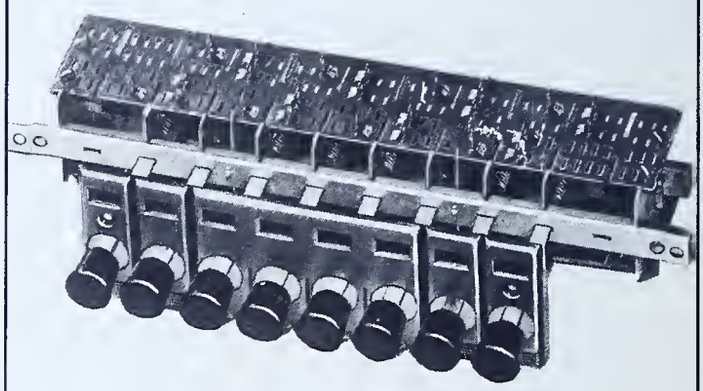

A group of push button switches.

SWITCH, ROTARY

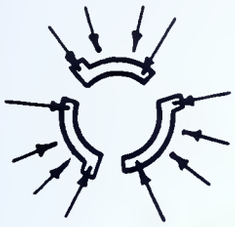

A switch making and breaking several circuits when it is rotated.

SWITCH, SINGLE POLE, SINGLE THROW

A switch which closes or opens only one circuit when operated.

THERMAL JUNCTION

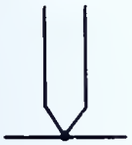

A device which generates a difference of potential between two contacting metals when the junction is heated.

TRANSFORMER, AIR CORE, FIXED COUPLING

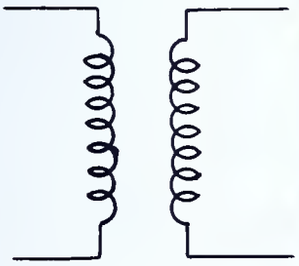

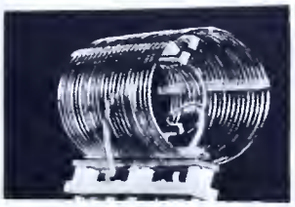

A transformer employing no magnetic substance in its core, which transfers electrical energy from one winding to another by induction. The position of those windings may not be varied.

TRANSFORMER, AIR CORE, VARIABLE COUPLING

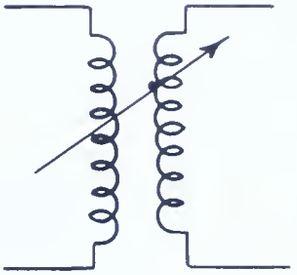

A transformer employing no magnetic substance in its core, whose coupling may be varied by changing the relative position of one winding to the other.

TRANSFORMER, AUDIO, IRON CORE

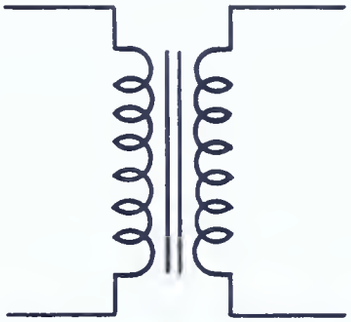

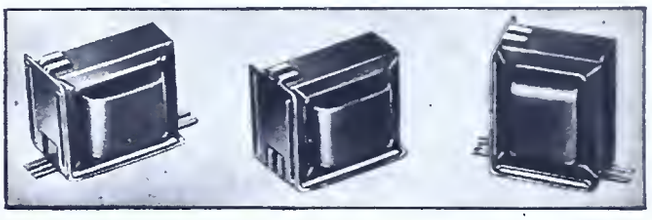

A transformer employing a laminated iron core and designed to transfer energy at audio frequencies by induction from one winding to another.

TRANSFORMER, AUTO, IRON CORE

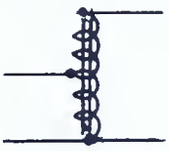

A transformer consisting of a laminated iron core on which a single coil is wound; tapped at one or more points.

TRANSFORMER, I.F.

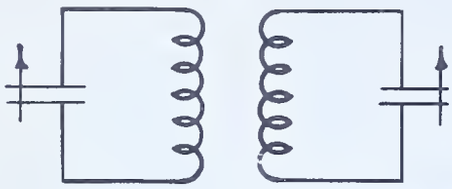

A transformer with an iron or air core used to transfer energy inductively at intermediate frequencies. (Note sketch shows each winding tuned by a trimmer).

TRANSFORMER, POWER (RADIO)

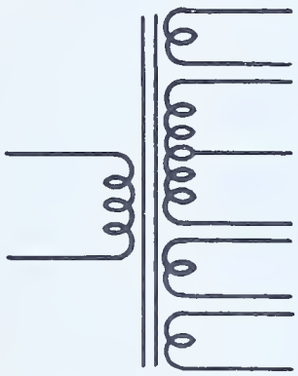

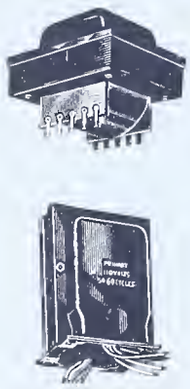

A transformer used to change a-c power by induction from any available voltage to that suitable for the several circuits of a radio.

TRANSFORMER, PUSH-PULL

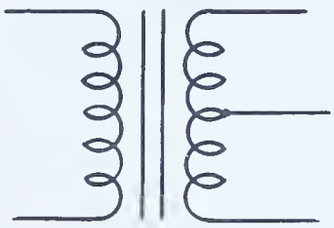

An audio transformer which has a center tapped primary or secondary.

VACUUM TUBE

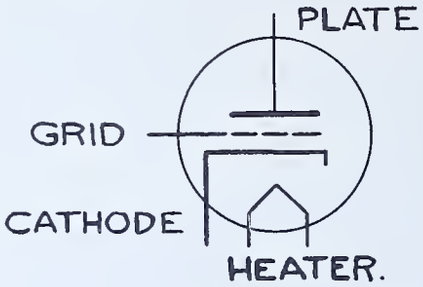

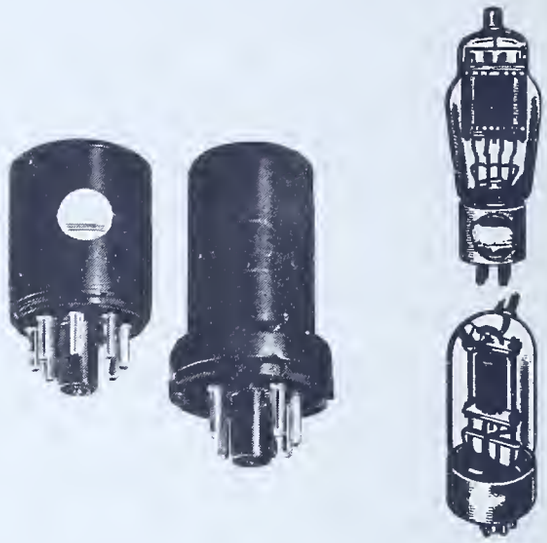

A device consisting of a number of electrodes mounted in an envelope or housing from which practically all air has been removed. Also called an electron tube or radio tube. Sometimes called a valve.

VACUUM TUBE WITH INDIRECTLY HEATED CATHODE

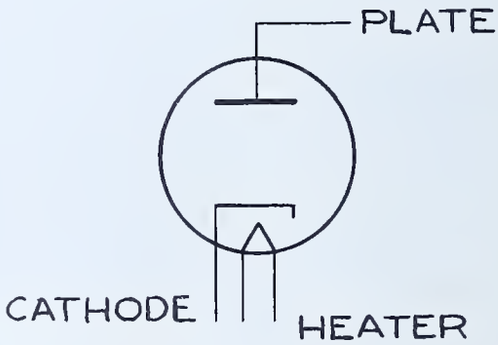

VACUUM TUBE, CATHODE RAY

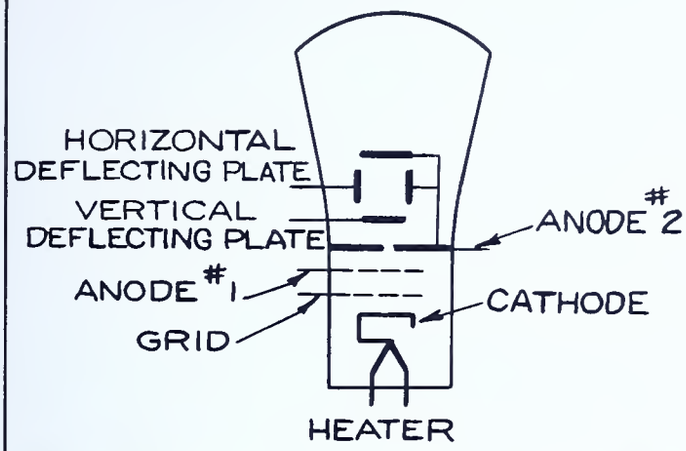

VACUUM TUBE, DIODE

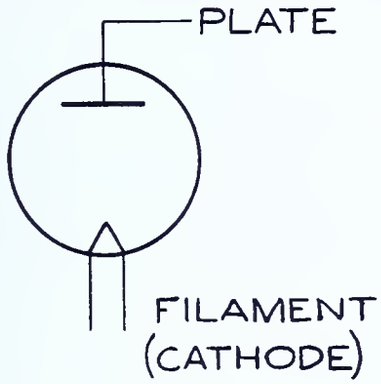

VACUUM TUBE, DOUBLE DIODE

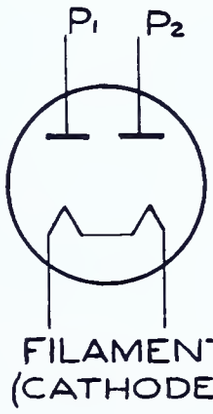

VACUUM TUBE, DOUBLE DIODE WITH INDIRECTLY HEATED CATHODE

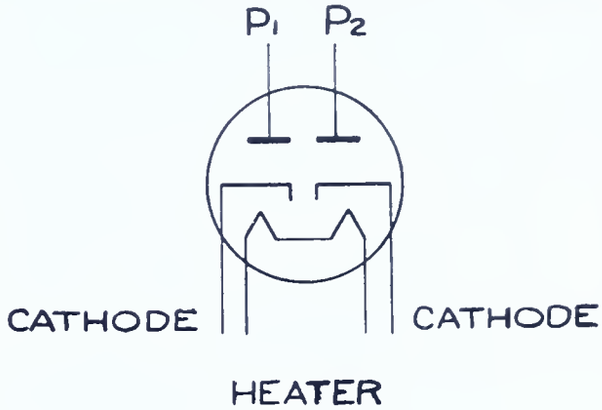

VACUUM TUBE, DOUBLE DIODE — TRIODE

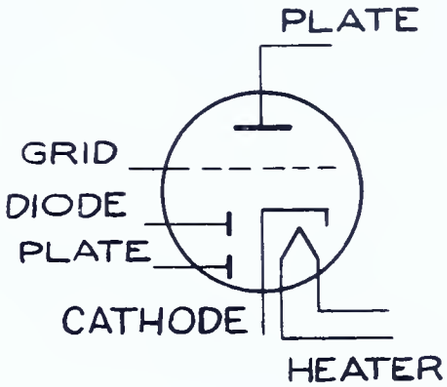

VACUUM TUBE, DOUBLE TRIODE WITH COMMON CATHODE

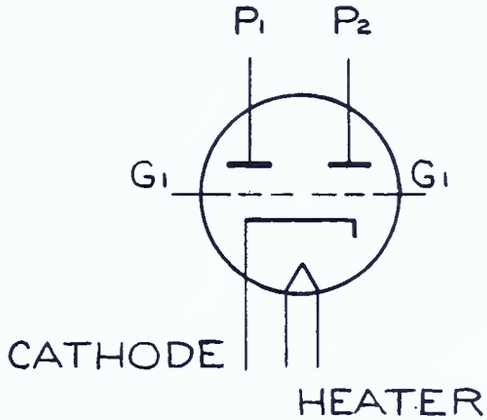

VACUUM TUBE, ELECTRON RAY

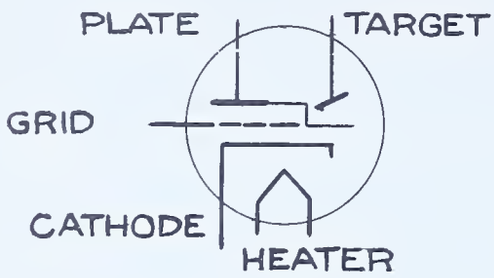

VACUUM TUBE, MULTI-GRID

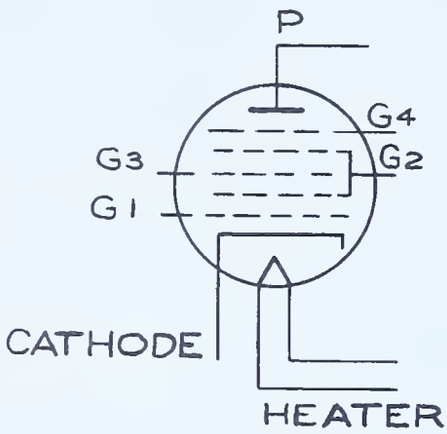

VACUUM TUBE, PENTODE

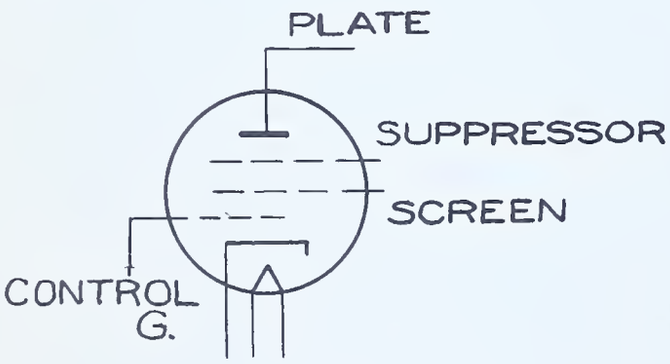

VACUUM TUBE, PENTODE
WITH SUPPRESSOR GRID CONNECTED
TO CATHODE INSIDE TUBE

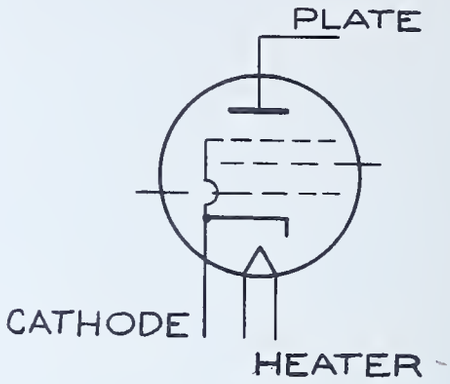

VACUUM TUBE, REGULATOR TYPE

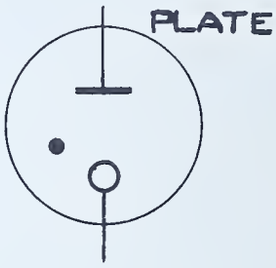

VACUUM TUBE, SCREEN GRID

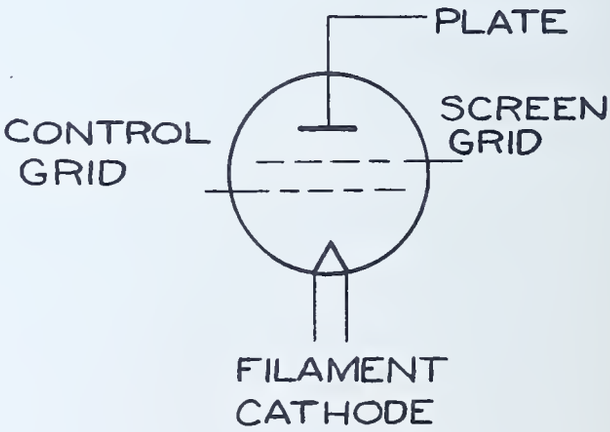

VACUUM TUBE, SCREEN GRID WITH INDIRECTLY HEATED CATHODE

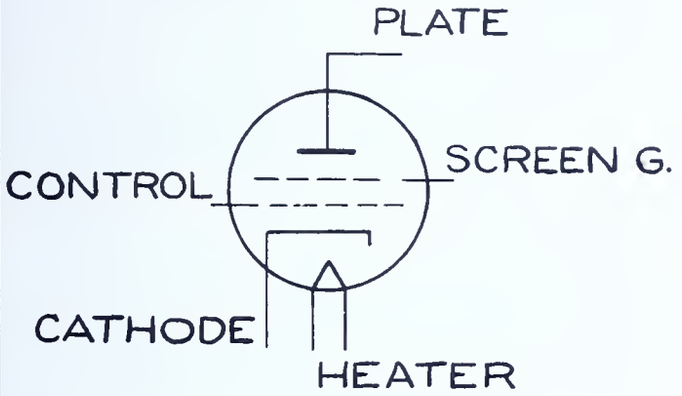

VACUUM TUBE, TRIODE

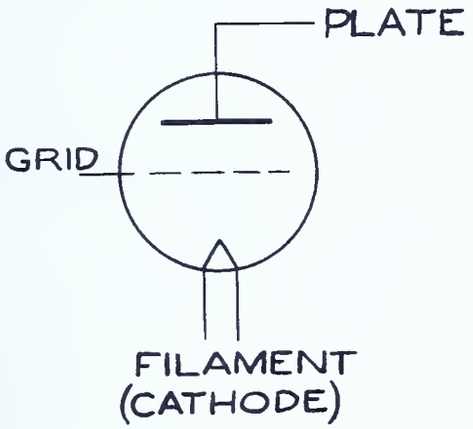

VACUUM TUBE, TRIODE WITH INDIRECTLY HEATED CATHODE

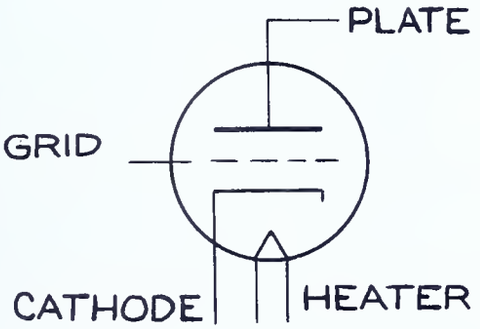

VIBRATOR, NON-SYNCHRONOUS

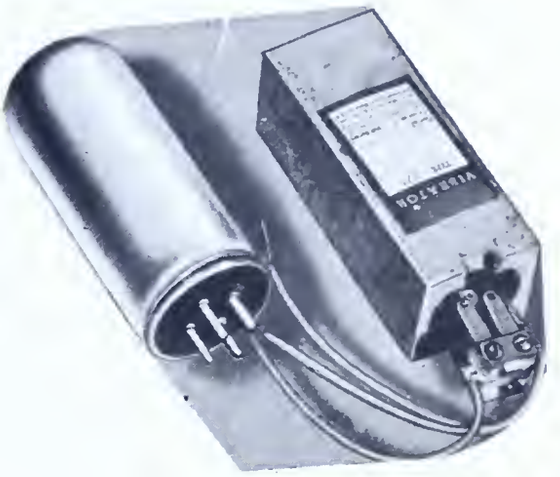

A device which converts a continuous direct current into a pulsating direct current by means of electromagnetically vibrated contacts.

VIBRATOR, SYNCHRONOUS

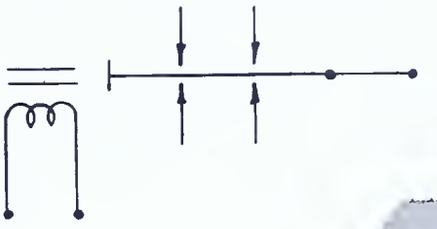

A device which converts a continuous direct current into a pulsating direct current by means of electromagnetically vibrated contacts and simultaneously rectifies the high voltage by mechanical means.

VOLTMETER

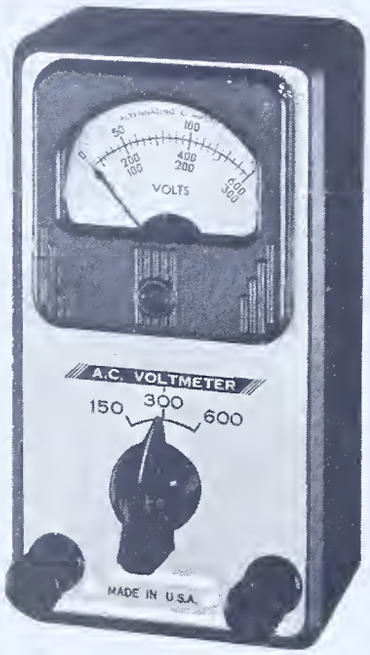

An instrument used to measure electrical pressure or difference of potential.

WATTMETER

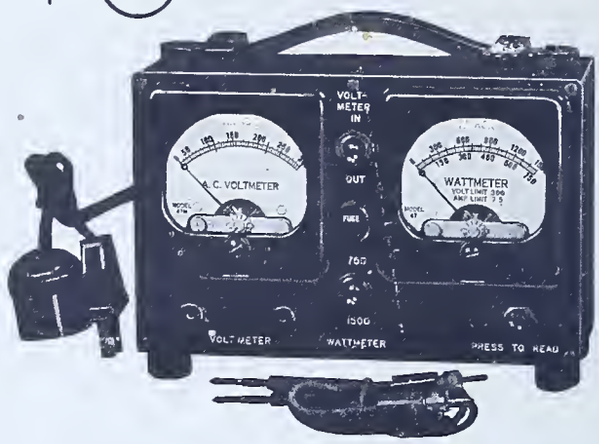

An instrument used to measure electrical power.

WIRE, TWISTED INSULATED

Two or more wires uniformly twisted.

ANGLES

ALLIGATOR CLIPS. (See CLIPS, ALLIGATOR)

BATTERY PLUGS

BINDING POST

BRACKETS

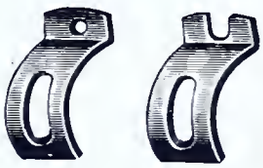

BUMPERS

CABLE CLAMPS

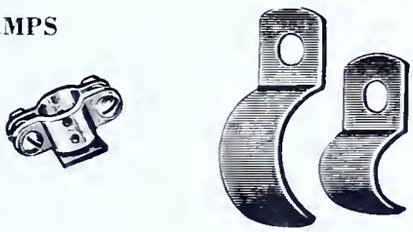

CHASSIS MOUNTS

CLIPS, ALLIGATOR

CLIPS, BATTERY

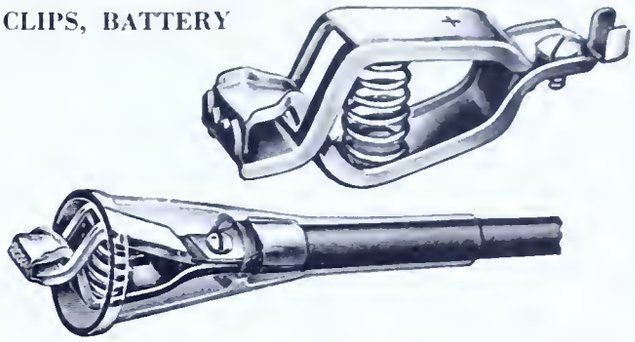

CLIPS, FUSE

CLIPS, INDUCTOR

CLIPS, SPRING, WIRE AND CABLE

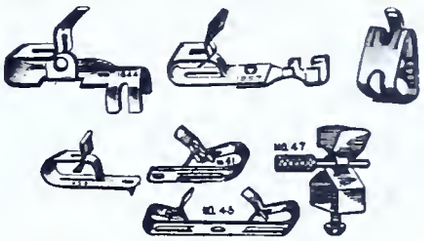

CLIPS, TEST

CLIPS, TUBE

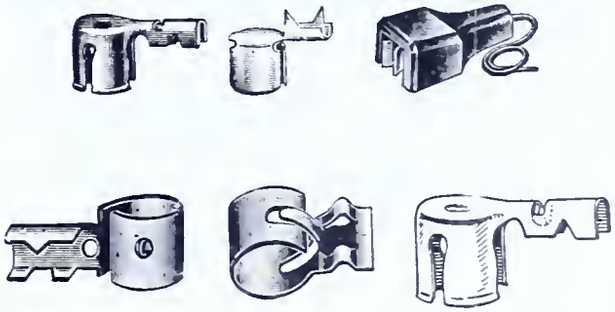

COIL FORMS

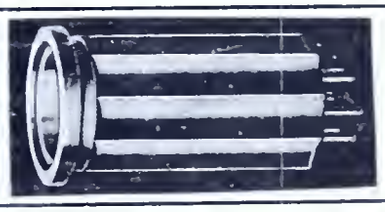

CONNECTORS, CABLE

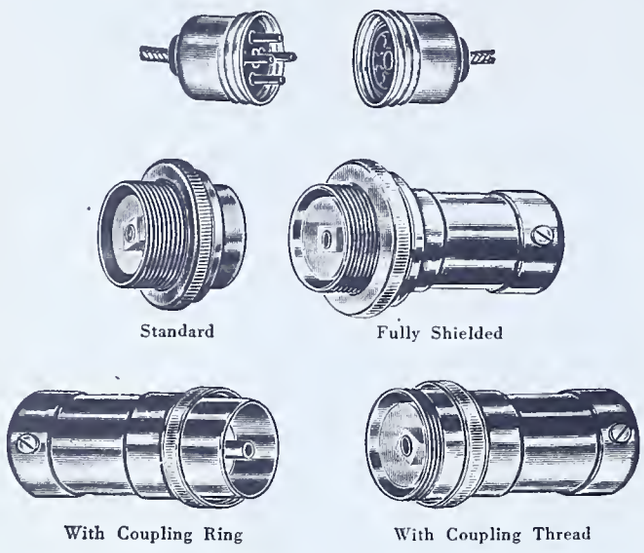

CONNECTORS, CHASSIS

CONNECTORS, MICROPHONE

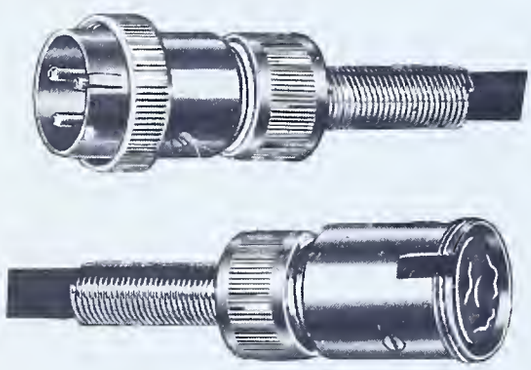

COUPLINGS, FLEXIBLE

CRYSTAL HOLDER

DIAL LAMPS

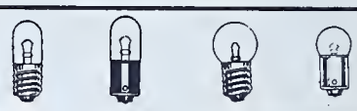

DIAL LIGHT ASSEMBLY, BAYONET TYPE SOCKET

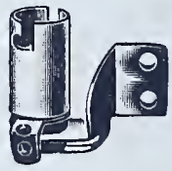

DIAL LIGHT ASSEMBLY, SCREW TYPE SOCKET

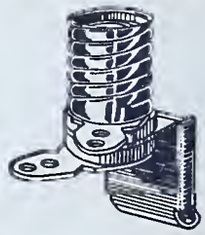

DIALS. (See KNOBS)

DIALS, TUNING

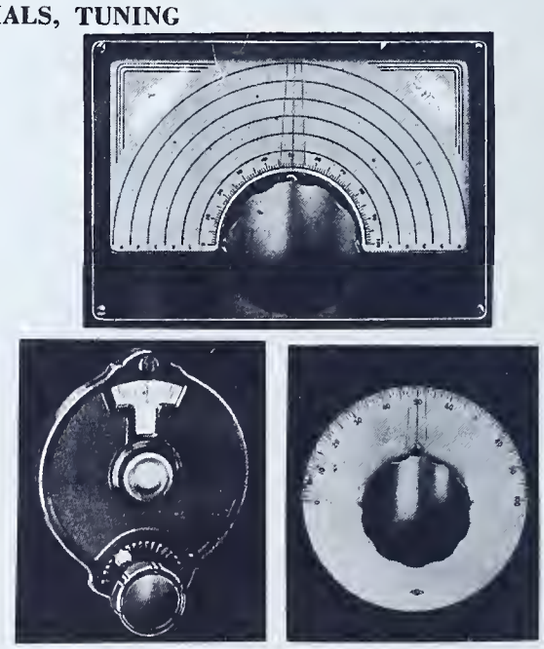

EYELETS

FAHNESTOCK CLIPS. (See CLIPS, SPRING)

FEET

FUSE MOUNTINGS

FUSE POST

FUSE EXTRACTOR

GRID CAPS. (See CLIPS, GRID)

GROMMETS

GROUND CLAMPS

INSULATORS, ANTENNA, LEAD-IN

INSULATORS, BEADS

INSULATORS, BUSHING

INSULATORS, FEED-THRU

INSULATORS, FEED-THRU, JACK TYPE

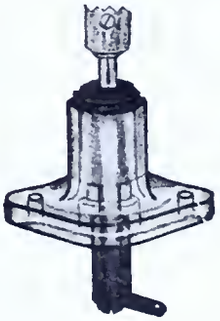

INSULATORS, FEEDER SPREADER

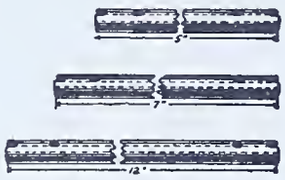

INSULATOR, KNOB

INSULATOR, SCREW EYE

INSULATORS, STAND-OFF

INSULATORS, STAND-OFF, CONE TYPE

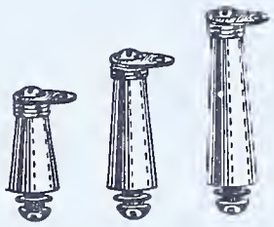

INSULATORS, STRAIN

INSULATOR, TUBE

JACK, BANANA

JACKS, PHONE

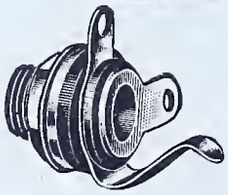

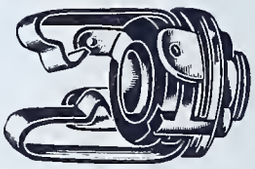

JACKS, PHONE TIP

JACKS, TWIN

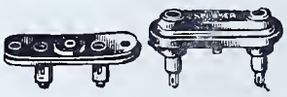

JEWEL

JEWEL INDICATOR ASSEMBLY

KNOBS

LIGHTNING ARRESTER

LUG, INSULATED, TAPER

LUGS, TERMINAL, SOLDERING

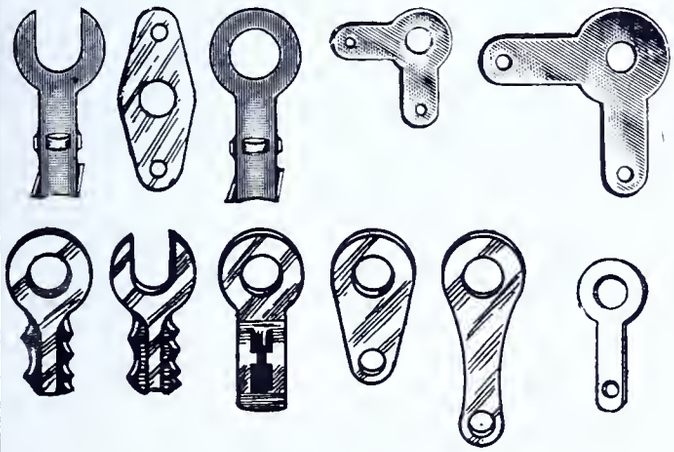

MICROPHONE CONNECTORS.
(See CONNECTORS, MICROPHONE)

NUTS

PHONE PLUG

PHONE TIPS

PILOT LIGHT.
(See JEWEL INDICATOR ASSEMBLY)

PLATES, NAME

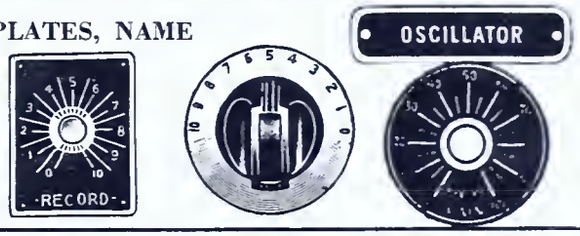

PLUGS, BANANA

RIVET

SCREW EYE INSULATORS.
(See INSULATORS, SCREW EYE)

SCREWS, FIBER

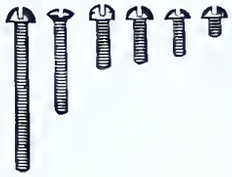

SCREWS, MACHINE

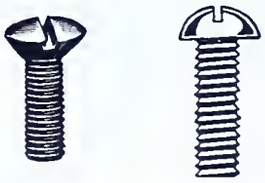

SCREW, ORNAMENTAL HEAD

SCREWS, PHILLIPS OR RECESSED HEAD

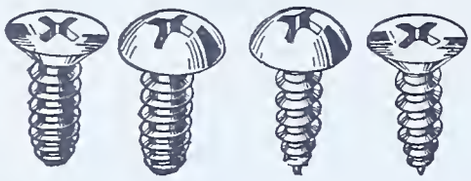

SCREWS, SELF-TAPPING

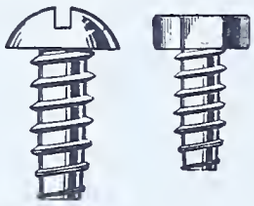

SCREWS, SET

SCREWS, WOOD

SHIELDS, COIL

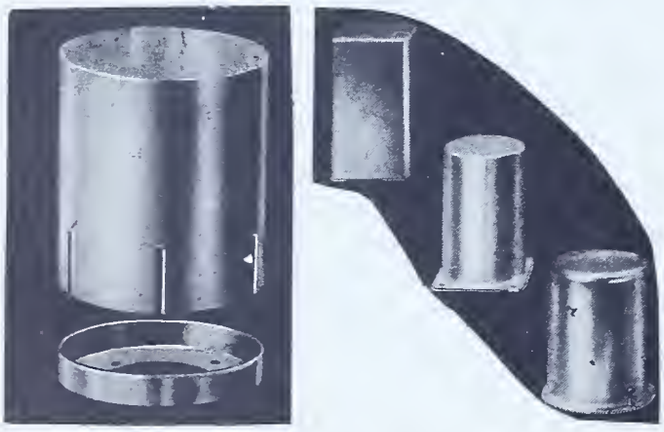

SHIELDS, TUBE

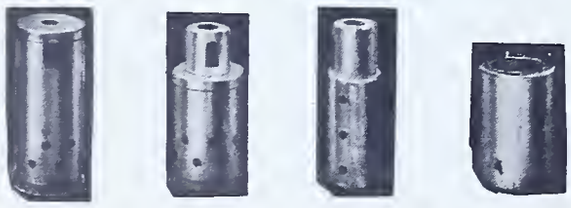

SOCKETS, CRYSTAL HOLDER

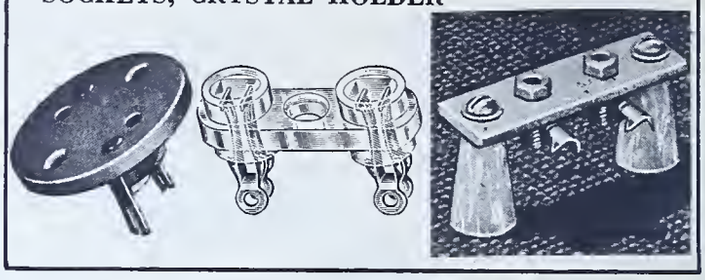

SOCKETS, DIAL LIGHT.
(See DIAL LIGHT ASSEMBLIES)

SOCKETS, TRANSMITTING TUBE

SOCKETS, WAFER

STAPLE, INSULATED

TERMINAL STRIPS, LUG TYPE

TERMINAL STRIPS, SCREW TYPE

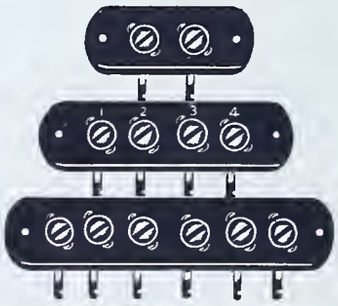

TEST CLIPS. (See CLIPS, TEST)

TEST LEADS

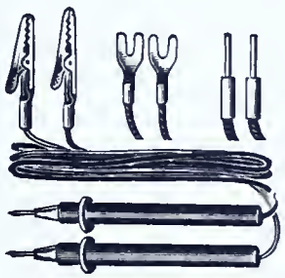

TEST PROD

TIE POINTS.
(See TERMINAL STRIPS, LUG TYPE)

TOOLS, ALIGNMENT

Fibrite Alignment Screw Driver

Alligator Alignment Wrench

Socket Head Alignment Wrench

Tuning Wands

TOOLS, NEUTRALIZING

TUBE SHIELDS. (See SHIELDS, TUBE)

TUNING DIALS. (See DIALS, TUNING)

WASHERS, FLAT

WASHERS, LOCK

WASHERS, SHOULDER

ABBREVIATIONS

Abbreviation	Other Abbreviations Often Used		Meaning Or Application
A			Applied to power supply heating vacuum tube filaments or heaters; also used for aerial connection
a-c	a.c.	ac	Alternating current flow of electricity
a-f	a.f.	af	Audio or sound frequency
amp.			ampere
A V C	a.v.c.		Automatic volume control
A W G			American Wire Gauge (See B & S)
B			Vacuum Tube Plate - d-c power supply
B-			Negative connection to B battery supply
B+			Positive connection to B battery supply
B&S	B. & S.		Brown and Sharpe (also called American Wire Gauge)
C			Applied to d-c power supply in vacuum tube grid circuits
C			Capacitance, the ability to store electrical energy, (see F., mfd., mmf.)
C-			Negative connection to C battery supply
C+			Positive connection to C battery supply
C bias			The d-c voltage between vacuum tube cathode and grid
CG	cg	G	Vacuum tube control grid element
cps	c.p.s.		Cycles per second
cw	CW	c.w.	Continuous wave (keyed unmodulated radio frequency signal)
d-c	d.c.	dc	Direct current (continuous flow of electricity)
D.C.C.	DCC		Double cotton covered wire insulation
D.P.D.T.	DPDT		Double pole double throw switch
D.P.S.T.	DPST		Double pole single throw switch

Abbreviation	Other Abbreviations Often Used		Meaning Or Application
D.S.C.	DSC		Double silk covered wire insulation
D.S.E.	DSE		Double silk covered and enameled wire insulation
E.	E	e.	Enameled wire insulation
E	e	emf	Voltage applied to a circuit, E usually for d-c voltage, e usually for a-c voltage
F	f		Farad, a unit of capacitance
F			Filament of a vacuum tube
f			Frequency rate of alternation (see cps, kc, mc)
G	g		Grid of a three element vacuum tube; also used for ground connection
G_1	g_1		Grid nearest to cathode of a multigrid vacuum tube
G_2	g_2		Grid second nearest to cathode of a multigrid vacuum tube
G_3	g_3		Grid third nearest to cathode of a multigrid vacuum tube
G_4	g_4		Grid fourth nearest to cathode of a multigrid vacuum tube
H	h		Vacuum tube heater element
h	H		Henry, a unit of inductance (Plural, Henrys)
I	i		Current (in amperes) in a circuit, I usually for d-c current, i usually for a-c current
i-f	i.f.	I.F. IF	Intermediate frequency (between a-f and r-f)
K	k		Cathode element of a vacuum tube
kc	KC		Kilocycles per second; 1000 cps
kilo			A thousand
kv			Kilovolt; 1000 volts
L			Inductance, the ability of an electrical device to store energy in a magnetic field (see also h, mh, μh)

Abbreviation	Other Abbreviations Often Used		Meaning Or Application
M			Indicates mega, prefix meaning million
ma	MA		Milliampere, a measure of current; equals 0.001 ampere
mc	Mc		Megacycles per second; 1,000,000 cps.
meg	mega		A million; 1,000,000
mfd.	MFD.		Microfarad; a measure of capacity equals 0.000,001 farad
mh	MH		Millihenry; a measure of inductance equals 0.001 henry
micro			A millionth; 0.000,001
milli			A thousandth; 0.001
mmf.	MMF.	MMFD. mmfd.	Micromicrofarad; equals 0.000,000,000,001 farad
mv			Millivolt; 0.001 volt
N C			No connection as applied to vacuum tube connections
P	p		Plate element of a vacuum tube
PA			Public address system
PM			Permanent magnet (speaker)
pri.	PRI		Primary or input winding of a transformer
R	r		Resistance in ohms in a circuit
r-f	r.f.	R.F. RF	Radio frequency
rms	r.m.s.		Root mean square, the means of the square root of the instantaneous values or the effective value, applied to a-c voltage and current
S			Shell of a metal vacuum tube
S.C.C.	SCC	s.c.c.	Single cotton covered wire insulation
S.C.E.	SCE	s.c.e.	Single cotton enameled wire insulation

Abbreviation	Other Abbreviations Often Used		Meaning Or Application
sec.			Secondary or output winding of a transformer
SG	sg		Vacuum tube screen grid element
S.P.D.T.	s.p.d.t.	spdt SPDT	Single pole double throw switch
S.P.S.T.	s.p.s.t.	spst SPST	Single pole single throw switch
S.S.C.	SSC	s.s.c.	Single silk covered wire insulation
S.S.E.	SSE	s.s.e.	Single silk enameled wire insulation
Sup. G	Sup.	SUP	Suppressor grid element of a vacuum tube
T	TA		Target of an electron-ray vacuum tube
T.P.S.T.	t.p.s.t.	tpst TPST	Triple pole single throw switch
t-r-f	TRF	t.r.f.	Tuned radio frequency
u-h-f	UHF		Ultra high frequency, higher frequency than usual r-f
V			Voltage as appearing at the terminal of a supply under load
v			Volt
w			Watt
w.v.			Working voltage
X	x		Reactance in ohms of a device or circuit (see X_c and X_2)
X_c	x_c		Capacitive reactance, opposition to a-c current flow caused by capacitance
X_2	x_2		Inductive reactance, opposition to a-c current flow caused by inductance
Z	z		Impedance in ohms, opposition to current flow in an a-c circuit due to resistance and reactance
4 P.S.T.	4 p.s.t.	4pst 4PST	Four pole single throw switch

Abbreviation	Other Abbreviations Often Used	Meaning Or Application
μ		Micro - prefix for millionth or 0.000,001, also applied to a vacuum tube characteristic. Small Greek letter "mu"
μa		Microampere; 0.000,001 ampere
μf		Microfarad; 0.000,001 farad
μh		Microhenry; 0.000,001 henry
μv		Microvolt; 0.000,001 volt
μμf		Micromicrofarad; 0.000,000,000,001 farad
Ω		Ohms, this form occasionally used for megohm. Large Greek letter "omega"
ω		Ohms. Small Greek "omega"